5 PROJECTS IN GUILD ◆ EDITION EVERY ISSUE!

Woodsmith®

Woodsmith.com

Vol. 44 / No. 262

RUSTIC HUTCH

Also Inside:

Router Workshop
Chamfer Bits

Technique
Installing Knife Hinges

Exclusive Plans:
- Spice Cabinet
- Greene & Greene Frames
- Coping Saw
- Bee & Butterfly House

Woodpeckers®

Precision Woodworking Squares

- One-piece central core.
- Stainless model includes scribing guides.
- Lip keeps the square flat on your work.
- Guaranteed accurate to ±.0085° for life.
- Available in inch or metric.

UNMATCHED ACCURACY
LIFETIME Woodpeckers GUARANTEE
EST. 1988

Precision Woodworking Square
Includes a Woodpeckers wall-mountable wooden case
12" 1281....**$129.99**
12" 1282SS Stainless Steel....**$149.99**
Other Sizes Available on ***Woodpeck.com***

Precision T-Squares

- Scribing guides on 1/16" centers.
- Beveled edge reduces parallax.
- Tight tolerance laser-engraved scale.
- 600mm metric version available.

Precision T-Square
Includes a wall-mountable Rack-It™
TS-12 12"....**$89.99**
TS-24 24"....**$124.99**
TS-32 32"....**$154.99**

Precision Taper Jig

- Repeatable tapers from 0° to 15°.
- Clamps material securely.
- Standard 32" capacity.
- Expands to 48".

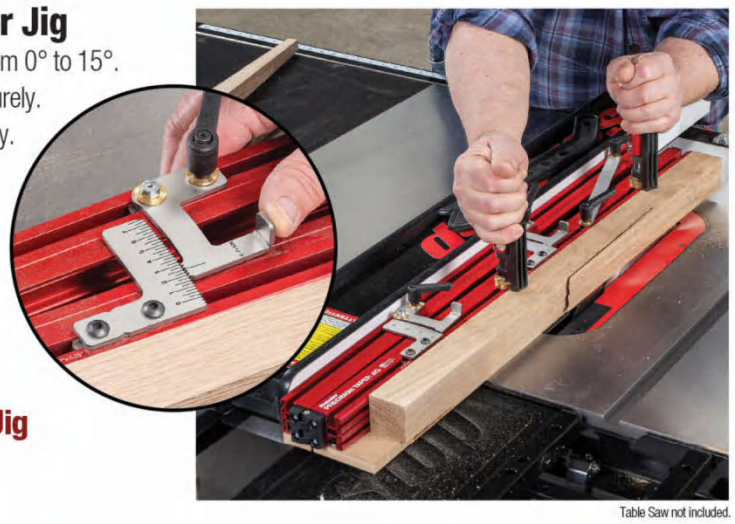

Precision Taper Jig
32"....**$279.99**
48"....**$399.99**

Table Saw not included.

Clamping Squares PLUS & CSP Clamps

- Holds stock at right angles.
- Works inside or outside.
- Works with any clamp.
- CSP Clamps speed the job.

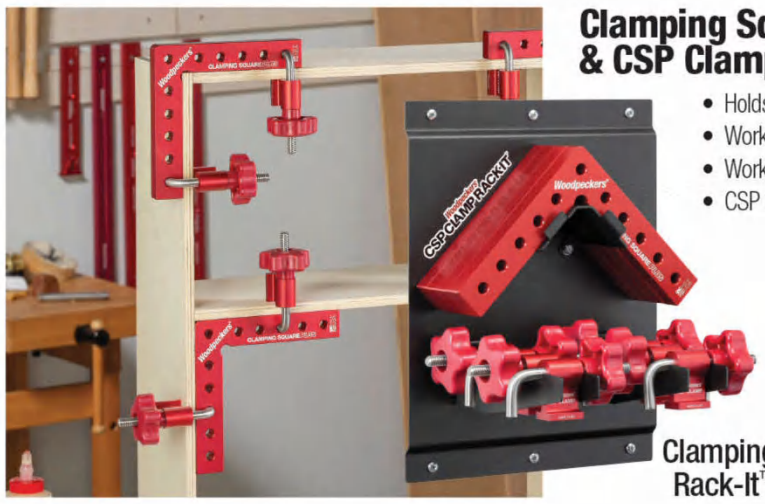

Clamping Squares PLUS Rack-It™ Kit....**$259.99**

CLAMPZILLA™ 4-Way Panel Clamp

- Applies pressure both directions.
- Works with material from 5/8" to 4".
- Improved vertical pressure.
- Flatter panels faster.

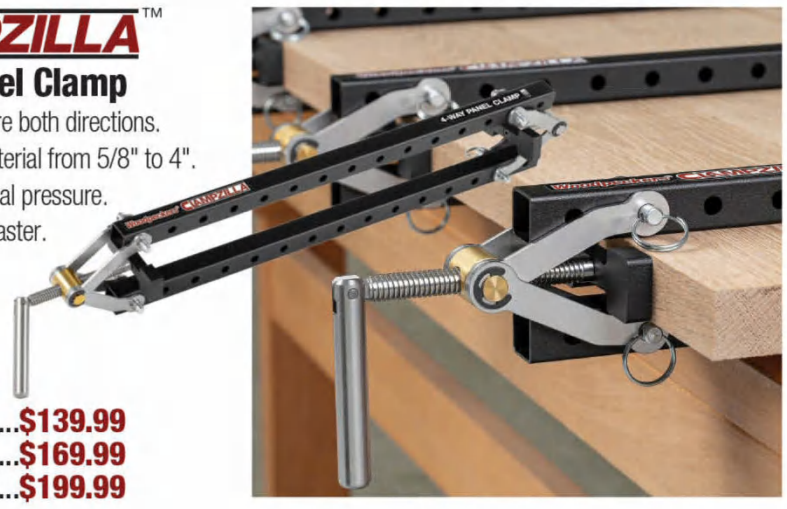

ClampZILLA
18" Capacity....**$139.99**
38" Capacity....**$169.99**
50" Capacity....**$199.99**

EZEdge Corner Plane

- Sole is a perfect 90°.
- 3 radius profiles.
- 45° chamfer.
- Resharpens easily.

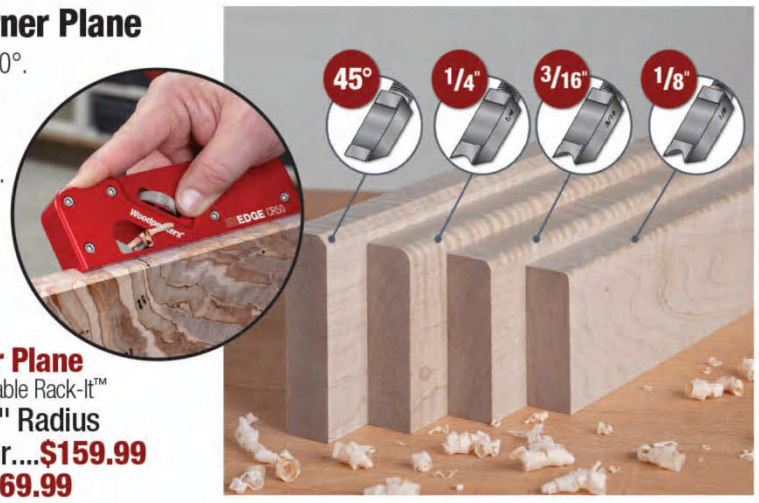

EZ Edge Corner Plane
Includes a wall-mountable Rack-It™
1/8", 3/16", 1/4" Radius
-or- 45° Chamfer....**$159.99**
Deluxe Set....**$569.99**

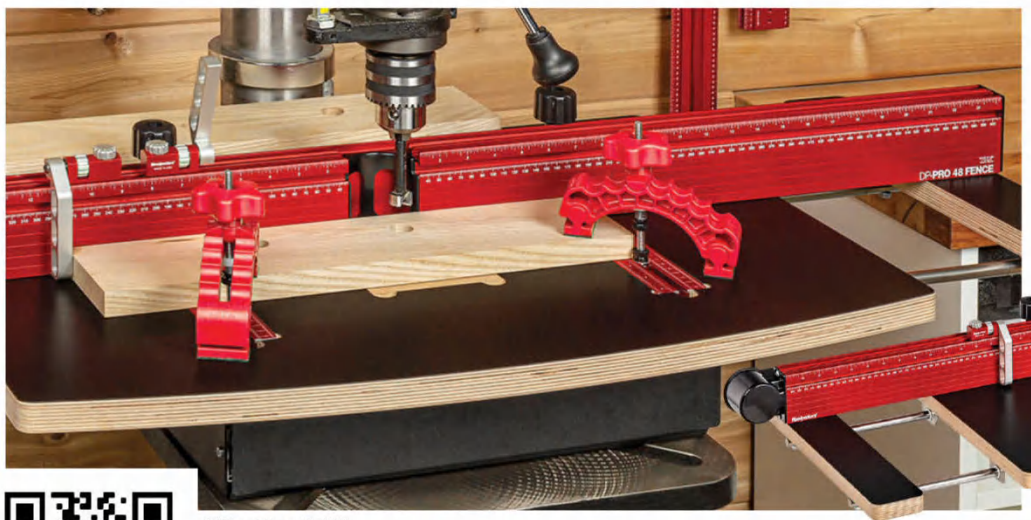

Drill Press & Hose not included.

Dust Port fits either end!

DP·PRO Drill Press Table System

- Integrated dust collection.
- Micro-adjustable Flip Stops.
- 1" thick Baltic Birch with laminate both sides.
- Extension Wings for long material support.

DP·PRO Drill Press Table Master System
36" Table, 24" Fence....**$499.99**
36" Table, 36" Fence....**$519.99**
48" Table, 36" Fence....**$549.99**
48" Table, 48" Fence....**$569.99**

Woodpeckers, LLC • Strongsville, Ohio • 800·752·0725 • ***Woodpeck.com***

Woodpeck.com

MADE IN USA

AUTO-LINE™ DRILL GUIDE

- Perpendicular holes anywhere.
- Fence fits on all 4 sides.
- Works with most drills.
- 1" inside frame.
- 2" capacity outboard.
- Deluxe Kit includes extensions.

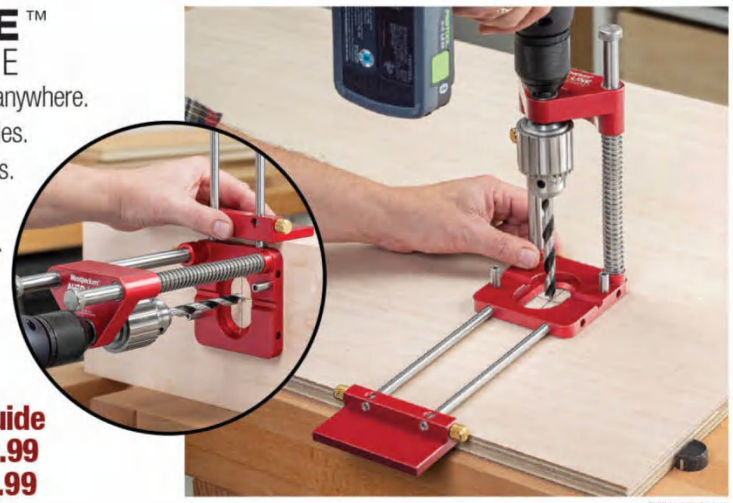

Auto-Line Drill Guide
Drill Guide....**$269.99**
Deluxe Kit....**$369.99**

Drill not included.

Table Saw not included.

Exact-90 Miter Gauge

- Square cuts every time.
- Miter bar self-adjusts 3/4" slots.
- Micro-adjust flip stop & 45" extension.
- 24" cross-cut capacity on most saws.
- Miter Bar available separately.

Exact-90
Miter Gauge....**$329.99**
25.5" Miter Bar....**$69.99**

Table Saw not included.

THIN RIP GUIDE™

NEW TOOL

- Safe, accurate jig for repeat cutting of thin strips.
- Works with 3/8" x 3/4" T-slot table grooves.
- Easily calibrated scales in both inch & metric.
- Ball bearing contact for smooth feeding.

ThinRip Guide....**$149.99**

DUAX Angle Drilling Table

- Auxiliary table mounts to your drill press.
- Adjusts to any angle from 0° to 90°.
- Teeth engage for repeatable angles.
- Optional Clamping Kit adds workholding ability.
- Designed to fit most drill presses 12" & larger.
- Ideal for chair and stool projects.

Duax Angle Drilling Table
Duax....**$299.99**
Deluxe Kit....**$339.99**

Drill Press not included.

Table Saw not included.

RIP-FLIP Fence Stop System™

- Relocates rip fence perfectly.
- Flips out of the way when not needed.
- Couple 2 stops for perfect fitting dadoes.
- Extra stops & dado couplers available.

RIP-FLIP Fence Stop System
*Fits SawStop**
36" Capacity....**$209.99**
52" Capacity....**$219.99**
*Powermatic/Biesemeyer**
30" Capacity....**$219.99**
50" Capacity....**$229.99**

Table Saw not included.

AUTOSCALE™ Miter Sled

- Scale accurate at any angle.
- Miter bar fits any 3/8" x 3/4" slot.
- Flip stop with micro-adjust.
- Stop extends to 50".
- Stops for 3-. 4-, 5-, 6-, 8- & 12-sided miters.

AutoScale Miter Sled
Deluxe....**$1089.99**
Left-*or*-Right Miter Sled....**$529.99**
Drop Zone....**$129.99**

StealthStop™ Miter Saw & Fence Stop System

- Stops retract completely within track.
- Micro-adjust provides precise control.
- Installs flat or as a vertical fence.
- Include track, stops, brackets & rule.

StealthStop
Left -or- Right
4' Fence....**$129.99**
4' Combination....**$199.99**

AUTOANGLE™ DRILL GUIDE

- Precision drilling without a drill press!
- Drill perfectly vertical or at any angle from 90° to 40°.
- Entry point is constant at any angle.
- Fence & stop system speeds repetitive work.
- Works with most hand drills.

AutoAngle Drill Guide
Standard....**$549.99**
Deluxe Kit....**$649.99**

Drill not included.

*Visit **Woodpeck.com** for hundreds of other American Made Tools!*

**NOTE: The Festool, SawStop, Powermatic & Biesemeyer brand names are the registered trademark of the respective company and is not associated with Woodpeckers, LLC.*

Woodsmith®

AN ACTIVE INTEREST MEDIA PUBLICATION

EXECUTIVE EDITOR Phil Huber
SENIOR EDITOR Erich Lage
ASSISTANT EDITOR Rob Petrie

EXECUTIVE ART DIRECTOR Todd Lambirth
SENIOR ILLUSTRATOR Dirk Ver Steeg
SENIOR GRAPHIC DESIGNERS Bob Zimmerman, Becky Kralicek
CONTRIBUTING ILLUSTRATOR Erich Lage

CREATIVE DIRECTOR Chris Fitch
PROJECT DESIGN EDITOR Dillon Baker
PROJECT DESIGNER/BUILDER John Doyle
CAD SPECIALIST/BUILDER Steve Johnson
SHOP CRAFTSMAN Marc Hopkins
CONTRIBUTING PHOTOGRAPHERS Chris Hennessey, Jack Coyier

HOME GROUP
ACTIVE INTEREST MEDIA

Woodsmith® (USPS 465-410) (ISSN 0164-4114) is published bimonthly by the Home Group of Active Interest Media Holdco, Inc. The known office of publication is located at 2143 Grand Ave, Des Moines, IA 50312. Periodicals Postage Paid at Des Moines, IA, and additional mailing offices. Postmaster: Send address changes to Woodsmith, Box 37274, Boone, IA 50037-0274.

Woodsmith® is a registered trademark of Active Interest Media Holdco, Inc.
Copyright© 2022 Active Interest Media Holdco, Inc. All rights reserved.
Subscriptions: $29/year, Single copy: $7.99
Canadian Subscriptions: Canada Post Agreement No. 40038201. Send change of address information to PO Box 881, Station Main, Markham, ON L3P 8M6.
Canada BN 82564 2911

Printed in U.S.A.

WoodsmithCustomerService.com

ONLINE SUBSCRIBER SERVICES

- **VIEW** your account information
- **PAY** your bill
- **RENEW** your subscription
- **CHANGE** your mailing or e-mail address

CUSTOMER SERVICE Phone: **800-333-5075** weekdays

SUBSCRIPTIONS
Customer Service
P.O. Box 842
Des Moines, IA 50304-9961
subscriptions@aimmedia.com

EDITORIAL
Woodsmith Magazine
2143 Grand Avenue
Des Moines, IA 50312
woodsmith@woodsmith.com

ACTIVE INTEREST MEDIA

ADVERTISING SALES DIRECTOR Heather Glynn Gniazdowski
DIRECTOR OF PRODUCTION Phil Graham
VICE PRESIDENT CIRCULATION Paige Nordmeyer
VICE PRESIDENT MARKETING SERVICES Amanda Phillips
VICE PRESIDENT EVENTS Julie Zub
V.P. GENERAL MANAGER FINANCE Craig Stille
ACCOUNTING MANAGER Stephen ONeill
DIRECTOR OF RETAIL SALES Susan A. Rose
CREATIVE DIRECTOR Edie Mann
ADVERTISING DIRECTOR Jack Christiansen
847-724-5633
jchristiansen@aimmedia.com
AD PRODUCTION COORDINATOR Julie Dillon
GRAPHIC DESIGNER Julie Green

PRESIDENT, HOME GROUP **Peter H. Miller**
PRESIDENT, MARINE GROUP **Gary De Sanctis**
CFO **Stephen Pompeo**
CTO **Brian Van Heuverswyn**
CHAIRMAN **Andrew W. Clurman**
CHAIRMAN EMERITUS **Efrem Zimbalist III**

from the editor

Sawdust

One of the dangers of working for a woodworking magazine is that Chris, John, and Dillon keep coming up with super cool projects. Next thing I know, I'm heading out to the shop to build one (or more) of them. This issue is a prime example. No sooner did I see the plans for the Greene & Greene style frames (page 28) that John Doyle designed then I found the perfect use for some cherry boards I had laying around. If you're a *Woodsmith Unlimited* member, you can check out the video of the process. Spoiler alert: I made a few changes.

Not long after that, Chris showed me the prototype for the coping saw (page 34). Long story short, I have a new custom coping saw just about wrapped up. If you'd like to keep up with projects we have in store for future issues, we do a weekly shop update on Facebook. Check it out Thursday afternoons at 1pm Central. Then let me know what cool projects you're building.

JOHN DOYLE, PROJECT DESIGNER

◄ John is originally from central Iowa and studied Mechanical Engineering and Forestry at Iowa State University. He worked as a designer/builder at a small custom cabinetry business in northern Iowa for a few years before starting at Woodsmith in 2005. He has also worked on the Woodsmith Shop TV show since 2008, and finds many other special projects to jump in on.

John is an amateur father and husband, and enjoys spending his free time with his wife and 4 kids. John and his family love cheering on the Iowa State Cyclones at basketball and football games. As time allows, he likes to travel and explore the outdoors.

SHAPER

PRECISION CUTTING SIMPLIFIED

ORIGIN + WORKSTATION

Shaper Origin is an easy-to-use handheld CNC router that brings digital precision to the craft of woodworking. Find out why more woodworkers and guitar luthiers like Christoph Noe rely on Shaper Origin in their shop to save time and make money.

shapertools.com

contents

No. 262 • Aug/Sept 2022

Projects

designer project
Greene & Greene Picture Frame 28
This West Coast branch of the Arts & Crafts family offers a mellow approach to details.

shop project
Coping Saw 34
Find out how hardwood and aluminum combine to make a lightweight saw that's tough enough for all kinds of tasks.

heirloom project
Rustic Hutch 40
This storage piece is scaled to fit anywhere. What draws your eye are the hand textured doors and drawer.

designer project
Spice Rack 50
The patterned door panel of this handy organizer shows off a different look for plywood.

outdoor project
Bee & Butterfly House 56
Here's an easy-to-build outdoor project that will add color and some life to your garden.

Departments

from our readers
Tips & Techniques 7

all about
Baseboard Molding 12

in the shop
Hand Plane Restoration 18

great gear
Cool Tools & Gear 24

woodworking technique
Installing Knife Hinges 60

router workshop
Chamfer Bits 64

Sources 66

These knobs follow a similar style to those in issue 252, but with a little extra wiggle room.

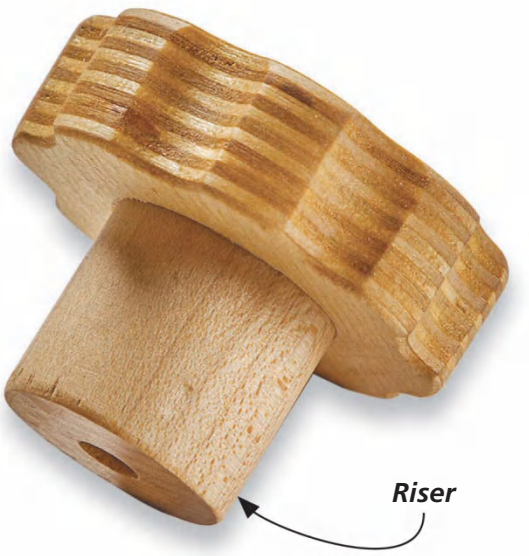

Threaded Knob Riser

I loved the shop-made threaded knobs from *Woodsmith* video tips so much that I had to make some for myself. I decided to make them as part of a set of hold-down clamps, but I did make a small change. As you can see in the photos at right and above, I created a riser under the knob to give my fingers more room when using it.

After making the hold-down, I made a riser from a 1" maple dowel. I drilled a hole to accept the carriage bolt and made a recess in the threaded knob for a T-nut. The carriage bolt feeds up through the riser and into the bolt. To ensure the riser wouldn't slip around, I glued it securely to the knob.

Jim Fox
Hartford, Iowa

Illustrations: Becky Kralicek

▲ Lay out the location of the cut, then set the jig over the piece and align the edge of the base to the layout line.

▲ Hold the jig firmly in place and run your circular saw across. The jig will ensure the cut stays straight and square.

Circular Saw Crosscut Jig

When making a crosscut with a circular saw, I always use a jig to ensure clean, square cuts. The one shown here is a combination of hardboard and plywood. The dimensions are listed at right, but I recommend leaving the hardboard extra wide to begin with. Use your circular saw to cut the jig to final width. This creates a reference edge you can use to align your cuts.

After marking your layout line on the workpiece it's a simple matter to make a clean, square cut (photos above).

William Faris
Murray, Utah

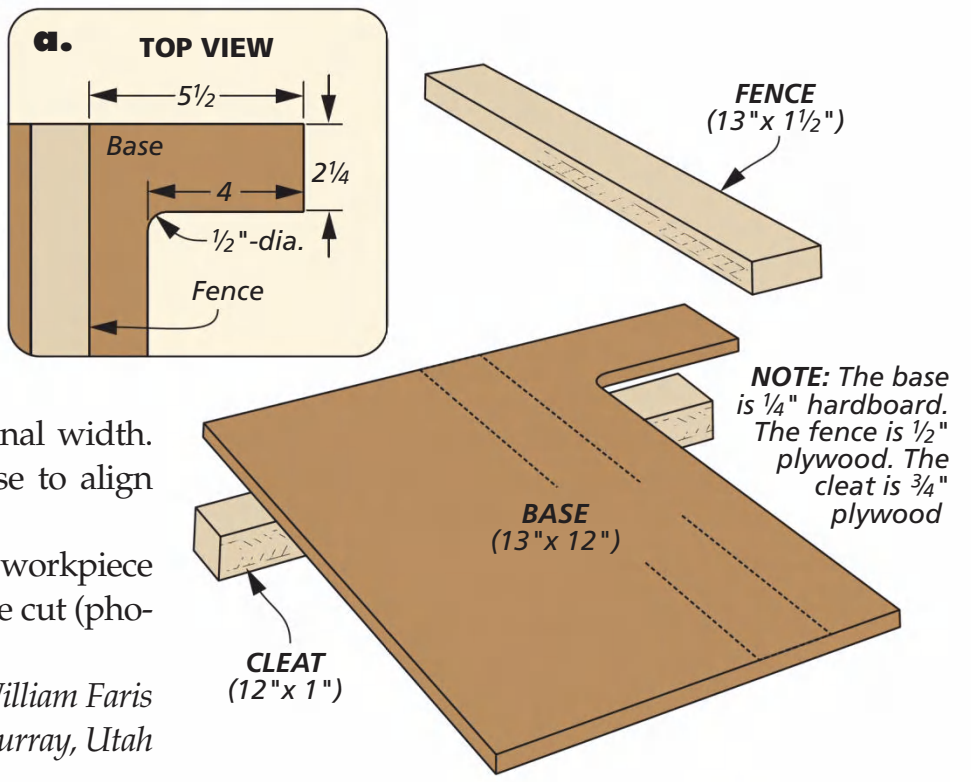

DIGITAL WOODSMITH

RECEIVE FREE ETIPS BY EMAIL

Now you can have the best time-saving secrets, solutions, and techniques sent directly to your email inbox. Simply go to:

Woodsmith.com

and click on,

Woodsmith eTips

You'll receive one of our favorite tips by email each and every week.

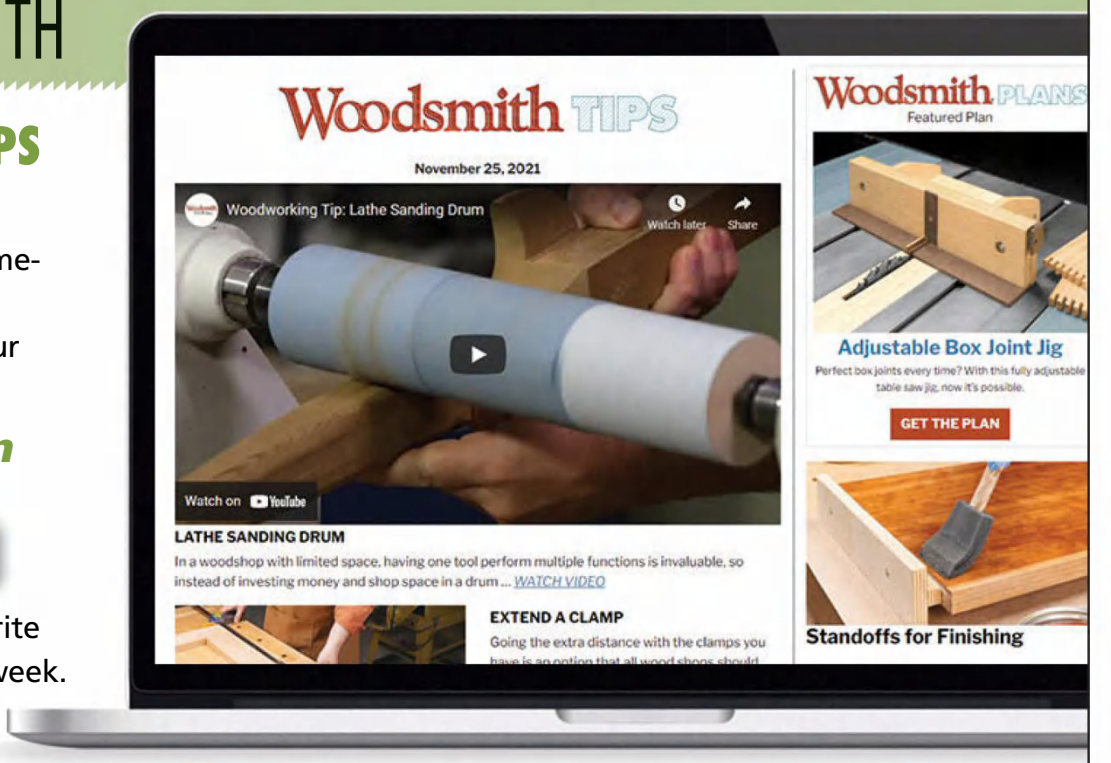

QUICK TIPS

Square Nail as Punch. *Tim Shaffer* of *Kiefer, OK* couldn't drive a nail in any farther without possibly marring his piece. His metal punch wouldn't be useful, as it might glance off. Luckily, he had a square nail handy with a flat, narrow tip. In a few blows, the nail was sunk into the wood.

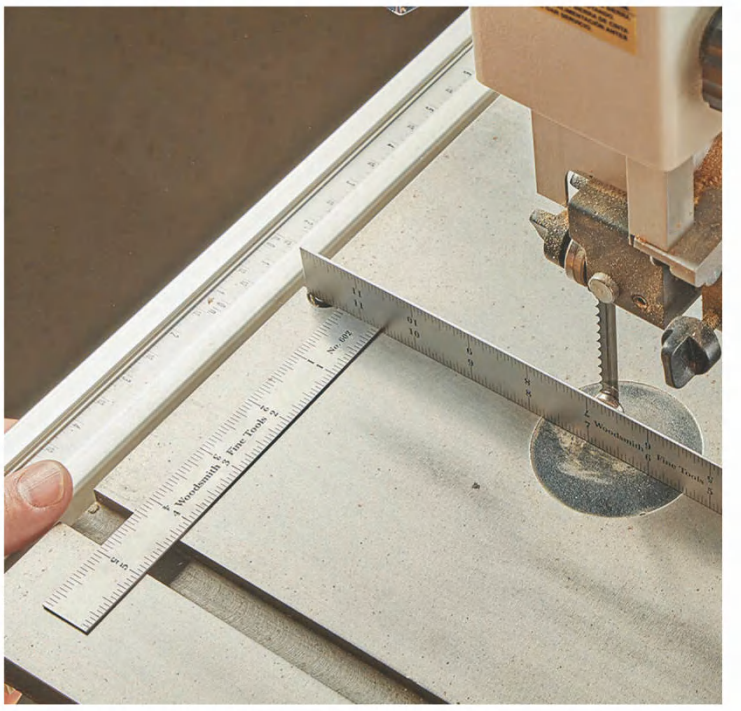

No Drift Band Saw. *Antonio Torres* of *Ottawa Hills,OH* was trying to take the drift out of his band saw. He snapped a 6" ruler to a rare-earth magnet, then to the blade. The ruler exaggerated the alignment of the blade, helping him to adjust the tracking and make sure the blade was parallel to the miter slot.

Illustrations: Becky Kralicek

Band Saw Circle Jig

All you need to cut a circle on the band saw is a piece of plywood with a nail driven in to act as a pivot. While simple, with just a little work you can make something more versatile. This jig is adjustable and easy to attach to your band saw.

The jig is made of two base pieces bevel ripped apart to form a tongue. The base pieces attach to a backboard, holding the tongue between them while still allowing it to slide. The sliding tongue has a nail driven in one end and trimmed to act as a pivot point. To adjust the pivot, move the tongue and lock it in place by tightening the thumb screw in the backboard.

The jig is held to the table with a pair of turnbuckles and blocks. To use the jig, mount it on your band saw with the pivot nail aligned to the front of the blade. Adjust the tongue so the distance from the blade to the centerpoint of the nail matches the radius of your piece. Lock the tongue in place you're ready to cut.

Magnus Cline
Grinnell, IA

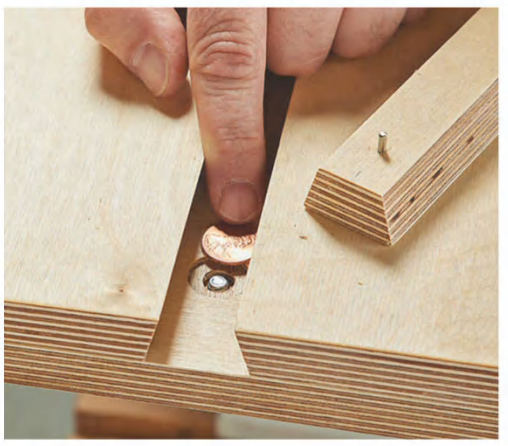

▲ A counterbored hole allows a penny to act as a pressure plate against the tongue.

▲ Turnbuckles make this jig easy to attach to and remove from your band saw table.

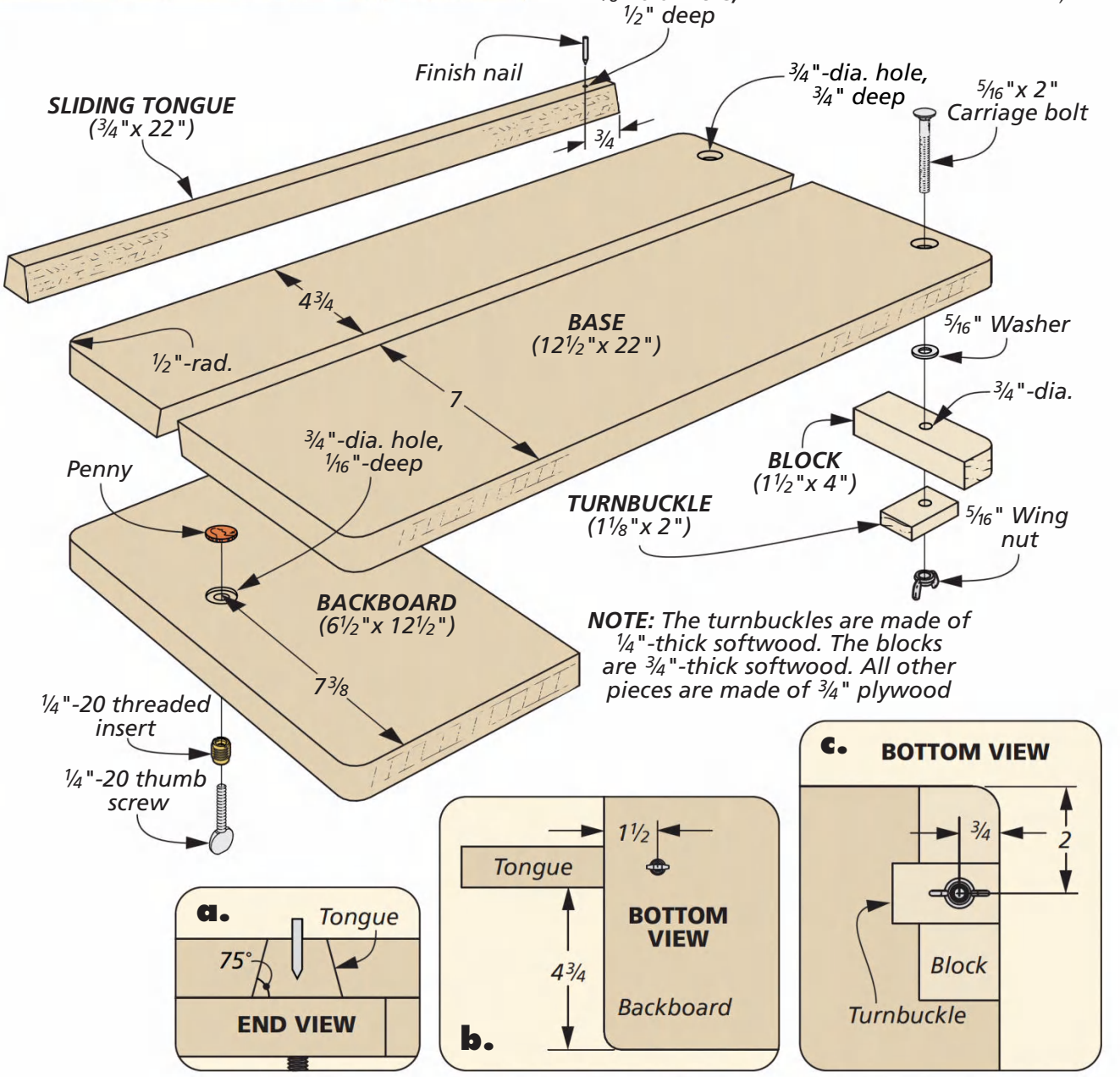

NOTE: The turnbuckles are made of 1/4"-thick softwood. The blocks are 3/4"-thick softwood. All other pieces are made of 3/4" plywood

Plane Hanger

I decided one day that I wanted my planes accessible from a rack, alongside my chisels. Here was my solution: shop-made hangers.

I started with a dowel that was larger in diameter than the width of the slot on my rack. From there, I headed to the drill press to bore a few holes, then to the miter saw to cut these hangers free. Next I fed a length of cord through the hole and back to make a loop, then I cut it off and knotted it to complete the hanger.

Lewis Peters
Gholson, TX

SUBMIT A TIP TO WIN

GO ONLINE

If you have an original shop tip, we would like to hear from you and consider publishing your tip in one or more of our publications. So jump online and go to:

SubmitWoodsmithTips.com

You'll be able to tell us all about your tip and upload your photos and drawings. You can also mail your tips to "Woodsmith Tips" at the editorial address shown on page 2. We will pay up to $200 if we publish your tip.

ALL About

Installing Baseboard

The lowly baseboard is a piece of trim that cleans up the transition between the walls and floors in your house. Even more than its cousin, crown molding, baseboards intersect all manner of items as they journey through the room, so you'll have a chance to hone your woodworking skills in a whole new dimension. Learning those skills, combined with the rigor of getting up and down a lot is why "running base" is assigned to the young cats on trim crews. There's a top view of a room on page 14 that will show you the different tactics you use to install baseboards. But first, let's look at the tools you'll need for the job.

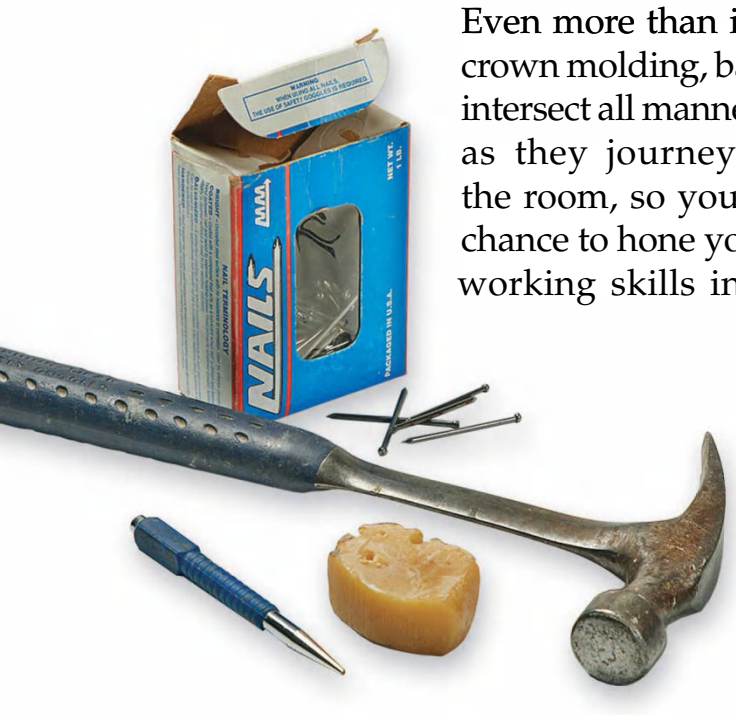

▲ Going old-school means you can install baseboard with tools as simple as a hammer, finish nails, a nail-set and a chunk of beeswax to lube the nails.

THE TOOLS & MATERIAL

It doesn't take a lot of equipment to install baseboards. If you're going the old school route you'll need a hammer, 6# and 4# finish nails, beeswax to lubricate the nails, and a nail set. The photo to the left shows the basic tools needed. (If you're installing hardwood, you'll need to predrill to prevent splitting.)

If you want to use nail guns, choose the guns that are able to shoot 15, 18, and 23 gauge nails. Nail guns are a lot easier to manage than learning to hand nail (especially if you're installing hardwood baseboards). If you don't have a friend with guns you can borrow, you might want to rent some for the project.

Regardless of how you're going to attach the baseboards, you'll need a miter saw with generous outfeed support, sandpaper, tape, and glue. Not to forget, one of the more important items — knee pads.

SHOE. Baseboards come in a wide variety of shapes, styles, and sizes. When baseboards travel across a hard surface, such as vinyl or tile, they will be accompanied with an additional piece called a shoe. Shoe is a thin piece of wood that covers the gap between the hard

Written by: Erich Lage

▲ A miter saw is your go-to tool for cutting baseboard. Many saws tilt left and right to cut bevels, which means you could lay the baseboard flat and make the same cut you see here.

surface and the baseboard. Shoe is cut, shaped, and finished in the same manner as the baseboard. When baseboard is traveling over carpet, it's best to lift it off the floor by the thickness of any adjoining hard surfaces.

Generally baseboard and shoe are made from pine, oak, poplar, or mahogany. Also, like other trim pieces, baseboards are available in composite materials. For the sake of clarity we're going to use a style called Colonial that has a crisp profile.

THE SET UP

Let's look at the miter saw setup in the photo above. Since I'm right handed, I hold the baseboard against the fence with my left hand and operate the saw with my right. For safety, I have support to the left for the end of the baseboard. This set up is ideal for one of my most used cuts — the cope cut.

THE COPE CUT. As baseboards follow the walls in your room, they change directions in two ways: inside, and outside corners. Outside corners are custom-mitered (more on that later) but due to the fact that inside corners are often out of square, an inside miter rarely yields good results. Instead, one baseboard is cut square and butted into the corner, and the edge of the mating baseboard is scribed to match the profile of the installed baseboard. How do you scribe the edge? Simply set your miter saw to make a 45° cut on the right end of the adjoining baseboard. Then remove the waste with a coping saw. (This is shown at the top of page 15.) Moving around the room in a counterclockwise manner keeps all my cope cuts on the right end of the board. Turn the page to see this in action.

I USE A WAGNER MOISTURE METER BECAUSE:

These are family heirlooms

80% of all problems in wood projects are caused by moisture content issues. A quick and simple, non-damaging moisture meter reading can save you from angry customer calls, unnecessary repair time, and a bad reputation. Call today and learn why Wagner's industry-leading Orion meters may just be the most important tool for your job.

WAGNER METERS (877) 721-8872 | WagnerMeters.com

Illustrations: Bob Zimmerman

1. THE FIRST PIECE OF BASEBOARD

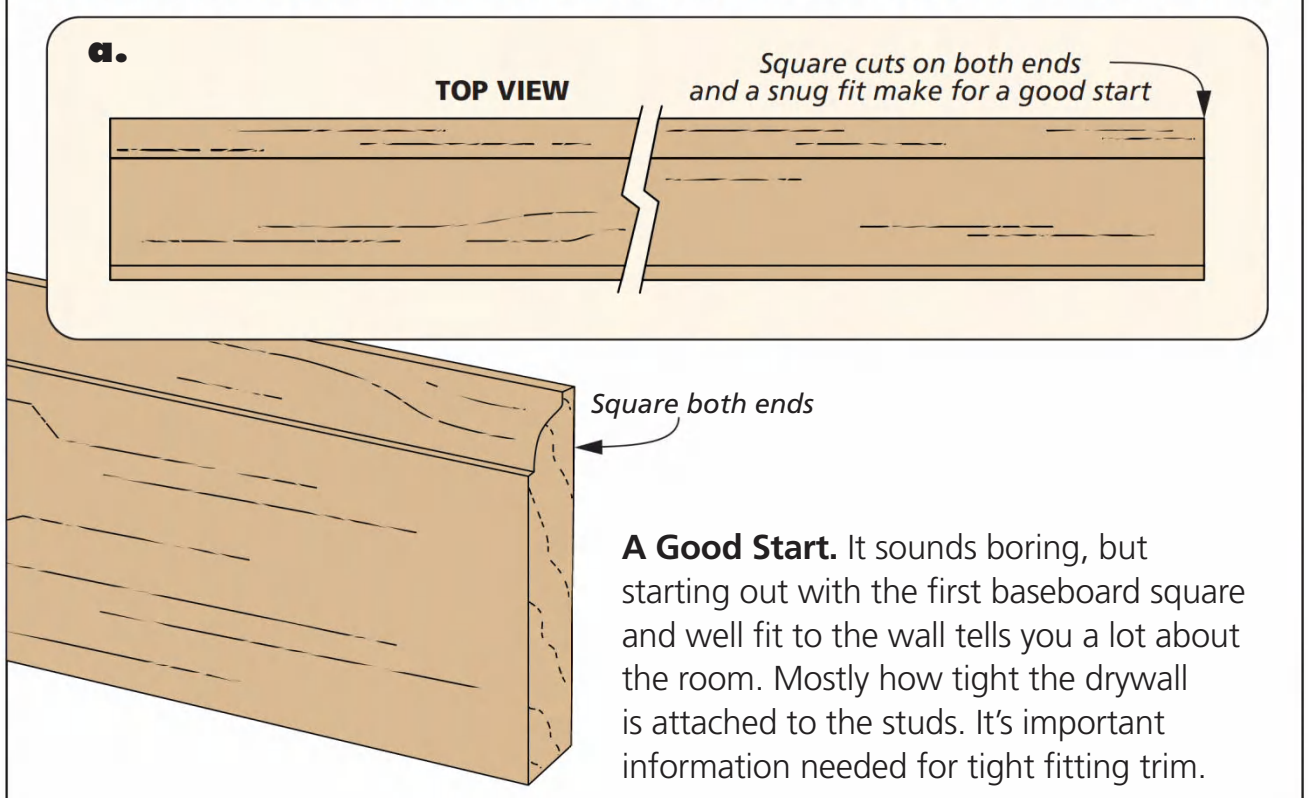

A Good Start. It sounds boring, but starting out with the first baseboard square and well fit to the wall tells you a lot about the room. Mostly how tight the drywall is attached to the studs. It's important information needed for tight fitting trim.

IN THE BEGINNING

The first baseboard installed is always square on both ends. Like you see in the box to the left, you want the first board square and a touch long (1⁄16" - 1⁄8")to fit between the walls snugly.

It's important to get a feel for the wall structure that you're attaching the baseboards to. If the drywall is loose it can throw your measurements and joint fitting strategies for a loop. After installing the first board, you might find that you'll need to tighten up the drywall in various places around the room.

COPING STEPS

The box on the next page walks you through the steps of coping the end of a baseboard.

Baseboard by the Numbers

Here you see a typical workflow and the type of cuts you'll need to make when installing baseboards

1 Square Corner

START HERE

Your first piece of baseboard will be square on both ends and fit snug.

2 Coped Corner

Coping the inside corners removes the frustration of walls that aren't square.

3 Outside Corner

Outside corners suffer from the same malady as their inside corner sisters. So you have to take mitering matters in your own hands.

4 Short Piece

Little pieces of baseboards can be rascals. So make a snug fit and glue it to the wall.

5 Lift Base

The visual flow of the baseboard needs to be even across the room. So lift all the baseboards to this level of the final hard surface.

Underlayment & Hardsurface

6 Scarf Joint

Scarf joints extend a run of baseboard beyond your longest piece available.

7 Return

Returning a baseboard is a good looking way to terminate a piece that's exposed on the end.

HOW TO COPE BASEBOARDS

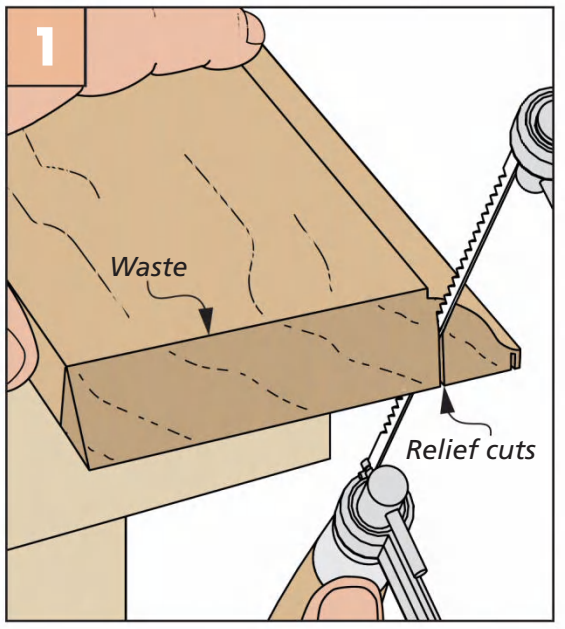

Relief Cuts First. Start by making straight cuts to the flat spots in the colonial baseboard profile.

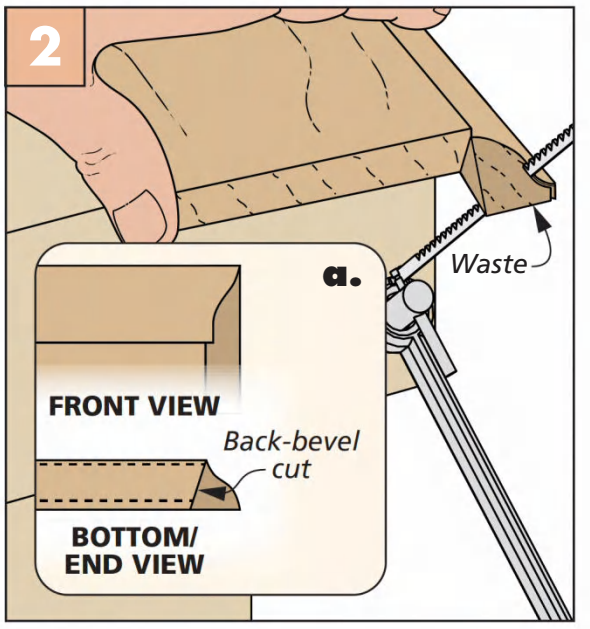

Waste Removal. Remove the large areas of waste with a back-beveled cut along the leg and crown of the board.

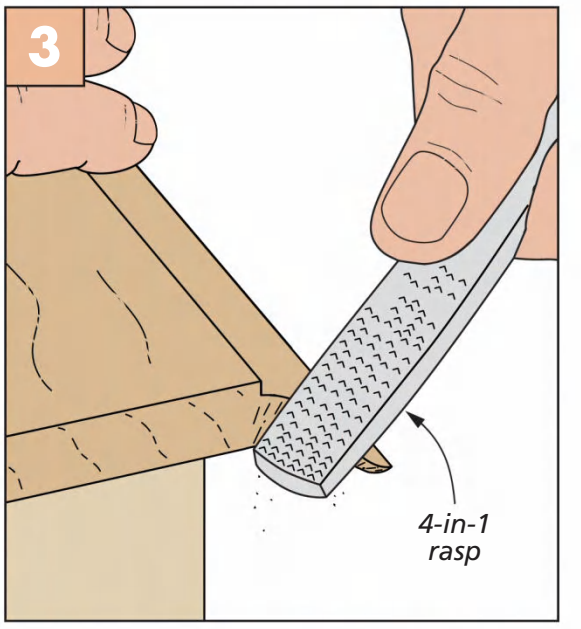

Fine-Tuning. The edge that shows the profile of the baseboard is easily shaped with a 4-in-1 rasp.

The process starts after you've made the miter cut at the saw.

Figure 1 shows making the two relief cuts that sets up what you'll do in Figure 2. In that step you start at the bottom of the board and cut to the first relief mark with the coping saw turned slightly inward (this is a back-bevel cut). In Figure 3 you'll clean up the profile with a rasp or file. The cope cut is the trickiest of the cuts you'll do. Turn the page to take a look at the other cuts used to install baseboards.

The Remaining Cuts

2-COPING CORNERS. After installing that first board you're ready to cope the next. The right end of the next board is coped and slides over the first. Make the fit a little snug to help close up any gaps that seem to show up.

3-OUTSIDE CORNERS. Like inside corners, many times outside corners won't be square. So use a straightedge to pinpoint both short points of the joining miters on each piece.

4-SHORT BASEBOARDS. Some boards are too small to be nailed. In such cases you'll have to tap in place a snug-fitting board with your nail-set. Coat the back with glue or construction adhesive.

5-LIFTED BASEBOARDS. Use scraps of the hard surface underlayment to lift all the baseboard off the floor. You can leave them in place, the carpet will hide them.

6-SCARF JOINTS. When a run of wall is too long for a single piece of baseboard, you can splice two boards together with a scarf joint. Make sure the scarf is centered over a wall stud. Apply a little glue to the joint and remove any squeezout immediately to avoid blemishes.

7-RETURNS. Returning a baseboard is in essence, dead-ending

2. INSIDE CORNER

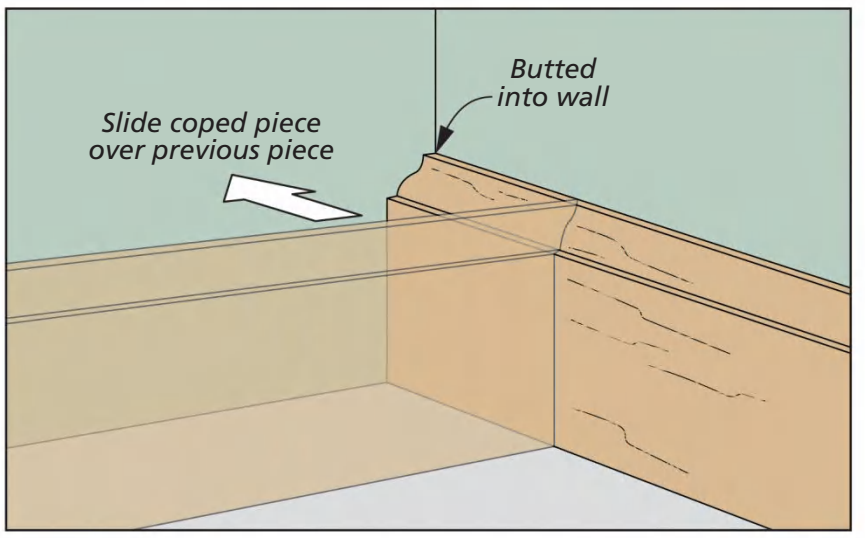

Slide in Place. The profile coped on the end of the baseboard should fit hand-in-glove over the previous piece. Occasionally, fine-tuning is required.

3. OUTSIDE CORNER

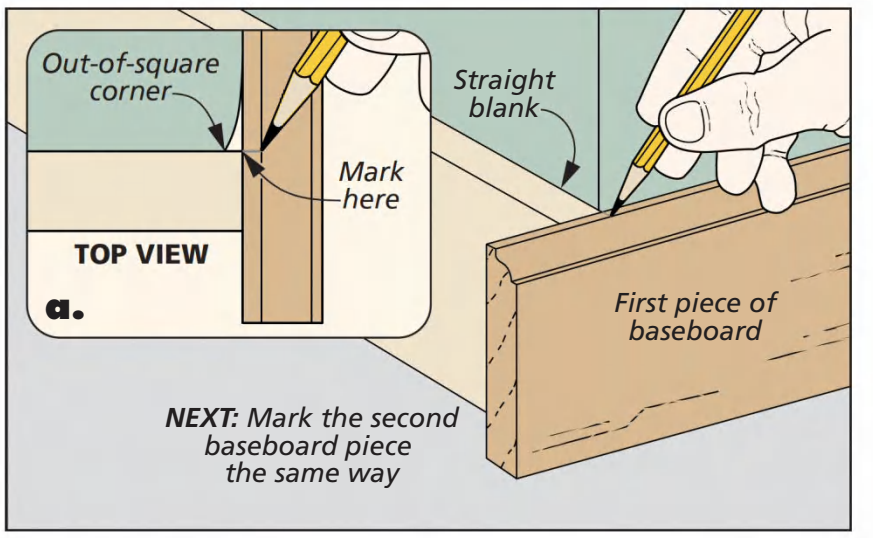

A Miter that Works. Making an outside corner look good often requires the fussy fitting you see here. The gap at the top can be hidden with wood filler or caulking.

4. SHORT PIECE

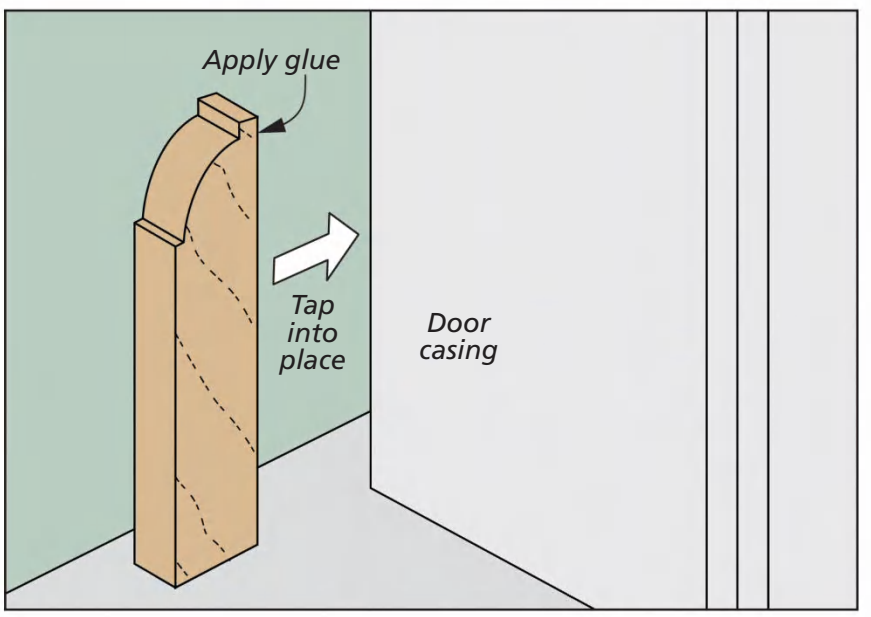

Itty Bitty Pieces. Many times doors are in the corners of the room. This means that their casing won't leave much room for baseboards. Gluing a sliver in place works fine.

5. LIFT BASE

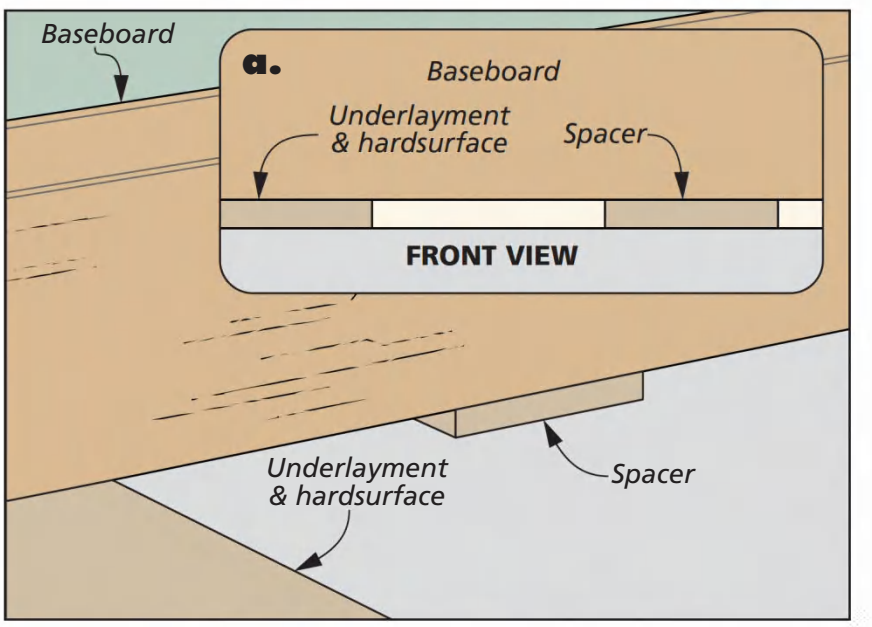

Keeping it on the Level. A little planning ahead will make your trim job look smooth. You don't want the baseboards to be waving up and down the wall.

6. SCARF JOINT

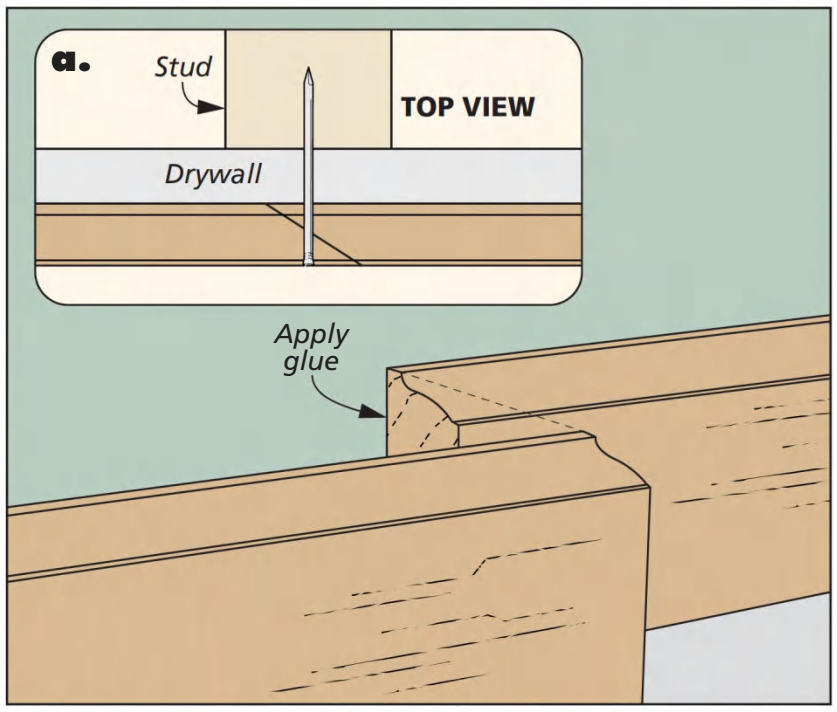

The Road Goes On. Making a scarf joint takes a little finesse. As you fit the joint, make sure the drywall is tight against the stud. Otherwise the joint will spread apart.

7. RETURNING BASE

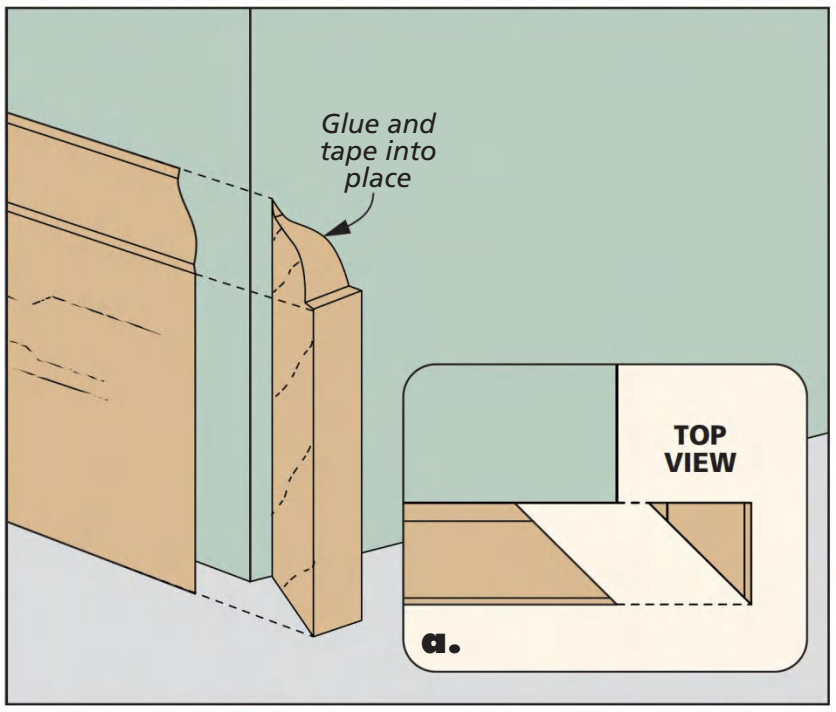

About Face. Dead ends in baseboards are easy to deal with when you apply this trick. Sometimes you have to make multiple cuts for the perfect fit. But it looks great.

the board. Cutting the baseboard square shows end grain and no profile. So first, cut the inverted 45° miter on the end of the board. Then you need to cut the return. The trick here is to let the saw blade come to a complete stop before lifting it out of the saw bed. Otherwise the draft of the blade will suck the small piece in and break it in the process. Happy Trimming! W

ENGRAVE | CUT | INLAY

- Laser engrave & cut wood at the touch of a button
- Customize woodworking projects for added value
- Laser system work areas up to 40" × 28"
- Wattage configurations up to 120
- USA made

EpilogLaser

888.437.4564 | sales@epiloglaser.com | www.epiloglaser.com/woodsmith

Hand Plane Restoration

My plane of choice on this restoration project was a Stanley No. 26 transitional jack plane. While these were produced from 1869 to 1942, this plane is likely a newer model, probably made after 1933.

Hand planes have an ancient history. The oldest hand plane on record was recovered from Pompeii, coated in volcanic ash and a little under two thousand years old. While I've never come across one quite that old myself, it's not uncommon to find planes that were produced almost a century ago, if not even earlier. And many of them show it.

I've always been impressed by restoration projects, whether it's cars, houses, tractors, or hand planes. In the last couple years, I've come by a few fixer-upper planes for cheap. I've found that restoring them to their former glory can be a great shop project. This restoration project is on a Stanley No. 26 plane, with a beat-up wood body, plenty of rusty castings, a broken horn on its tote, and a chipped out mouth. There's plenty to be done.

Written by: Rob Petrie

To clean off the dirt, grime, and what remained of the old finish, I started with a card scraper. Once I had gotten a good deal off, I sanded with 150- and 220-grit sandpaper to bring the body down to smooth, bare wood.

The throat can be a hard place to sand, so I made a sanding stick with a scrap piece and some adhesive sandpaper. Sand until the bare wood is exposed.

FIXING UP THE BODY

To begin, I disassembled the plane, removing the tote, the knob, and the castings. I chose to start by cleaning up the body of the plane, as you can see in Photo 1 above.

I sanded and scraped to bring out the bare wood of the body, then cleared out the throat with a shop-made sanding stick (Photo 2). Avoid the sole though, as we'll take care of that at the jointer.

The jointer is the surest way to get a flat sole. However, if you plan on tightening up the mouth (like I needed to), hold off until the patch is in place.

This is also a good oppurtunity to scrape and sand the knob, as it's mostly the same work as with the body. Because of its shape, the knob can be a pain to clean up, but go easy and be careful not to take off too much, as you could risk distorting it.

Don't sand or scrape the sole of the plane. The sole needs to be flat, and there's nothing in the shop that I trust for that task as much as the jointer.

Illustrations: Bob Zimmerman

Begin by scribing out the location of the insert on the sole of the plane. Consider here how wide the mouth of your plane needs to be. For my jack plane, I only wanted to close it a little.

When removing the waste for the throat insert, I prefer a chisel, registering the tip in the mark I scribed. This could also be done on the table saw, just be sure to back up the cut to prevent chipout.

Glue your insert in place, providing equal clamping pressure on both sides. The fit on this piece needs to be as tight as possible, so don't be afraid to mallet it in and sink those clamps down.

After the insert has dried, saw the ends flush. Although you'll be running it through the jointer, you'll still want to sand down the insert to the same height as the sole.

MAKING A THROAT INSERT

As you can see below, the mouth of my plane needed a little love. While a jack plane doesn't need the tightest throat in the world, I did want to shore up those gaps before using the plane again.

The mouth of my plane didn't have the prettiest smile. Two big chunks had been chipped out of it long ago, leaving a wide gap that had to be closed.

I started by looking for a piece of wood to match my plane. Since the body of this Stanley is beech, that would be ideal, but alder or birch would work as well. I ended up going with birch, as it would stand up against wear better than alder.

The photos above illustrate the process of making a throat insert. First, lay out the size and location of your insert. You have plenty of options here, but the biggest consideration is how tight the throat should be. Since I'm using a jack plane, I really just wanted to fix the chips. If I was fixing up a smoothing plane, I'd pull it in much tighter.

As shown in Photo 1 above, I used a marking knife to lay out my insert. This isn't necessary, but I did it because I wanted to take out the waste with a chisel to ensure a tight fit (Photo 2). The other option for removing this waste is to cut it like a dado on the table saw. This can save you some chiseling time, but even then I recommend removing the middle with the table saw and saving the edges for a chisel. The fit needs to be snug, and it's best to sneak up on the final size.

Once the insert fits, glue and clamp the pieces, then clean up the squeezeout (Photo 3).

FLATTENING OUT A METAL SOLE

Truing a Metal Plane. Flattening a metal sole requires some special consideration. You'll need to do so with the plane assembled (just be sure to back the blade off), as the tension of the lever cap can flex the metal sole. A lapping station like you see at right is ideal. The one I used was merely a piece of plate glass with adhesive sandpaper attached to it. You'll need three patches of sandpaper: one around 100, one around 150, and one around 220. Start with the coarse paper, making a few passes and checking the progress on the sole. It can be difficult to follow the progress on a metal plane, but a few lines drawn with permanent marker can be a good guide. Work through the grits, going from coarse to fine, to remove the high spots and take out the striations that form.

▲ Work your way up in grits as you flatten the sole out. Marking the sole with a permanent marker is a good means of tracking progress.

After the glue has dried, clamp the plane body in a vise and use a handsaw to cut the insert down to width (as in Photo 4). As I mentioned on the last page, it's best to joint the sole of a wooden plane flat, but I sanded the insert flush first to make sure it wouldn't catch on its way through.

Once the insert is sanded down, take the sole for a pass on the jointer (shown in Photo 3 on page 19). You should be left with a smooth seam and a clean, bare sole.

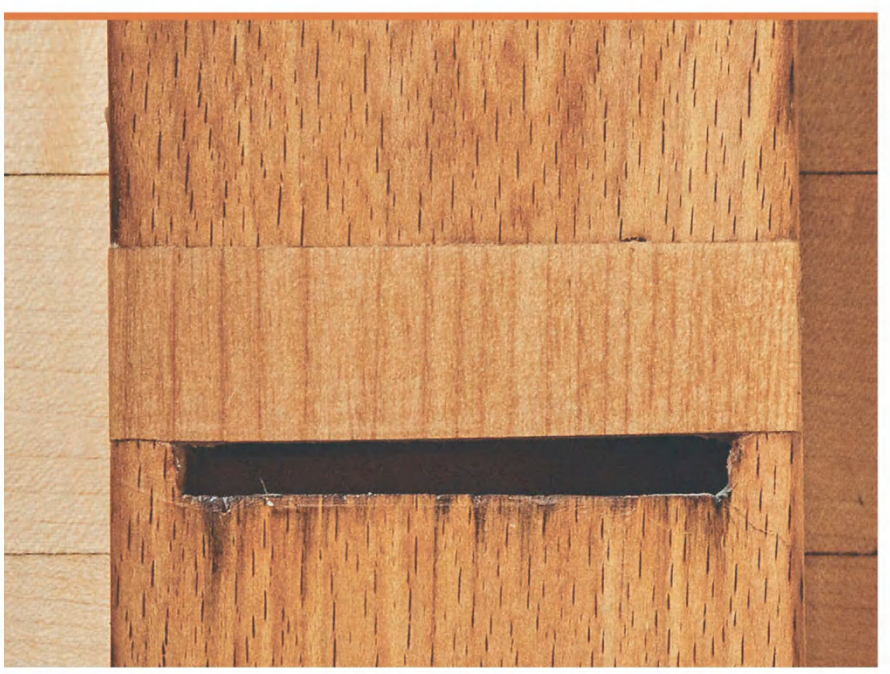

▲ After jointing the sole and finishing the plane, I was pleased with how the insert turned out. Despite the visual difference in grains, the seam between them is as smooth as any glued-up panel.

My task for the tote was not only to clean up and refinish the body, but also to make a patch to repair the broken horn.

TOTE REPAIR

The big issue on the tote, as you can see at left was the horn. It'd been broken off and worn down, and it wasn't a clean break either.

I began by flattening the break at the band saw (Photo 1). I used the fence to try and get as close to parallel to the bottom of the tote as possible. Then I clamped up a sanding block to make sure the break was sanded flat (Photo 2). Be careful not to let the tote rock as you sand or you'll end up with rounded edges that won't line up.

If your replacement is going to cover up part of the screw hole, measure the hole. You'll need to drill this out later.

Then I went back to that scrap of birch and got myself another little chunk. As shown in Photo 3, the replacement piece is glued to the tote, and this is why I aim to get the top and bottom of the tote parallel: so I can simply use one clamp. A few wedges may be necessary to get the pressure right.

Once dry, lay out the shape of the horn on your replacement piece. Then take a trip to the band saw to cut the profile.

Now it's time to start shaping. To do this, get out your rasps and files, then clamp the tote in a vise. Now shape the handle, working on both sides to keep the tote symmetrical (Photo 6). If your

Use a band saw to cut off the broken edge. Keep the bottom against the fence to keep the cut parrallel to the bottom.

Work out the blade marks from the band saw on a sanding block. I found it best to keep the block in a vise.

Glue up the patch and clamp it down. A few wedges work to keep the clamping pressure balanced.

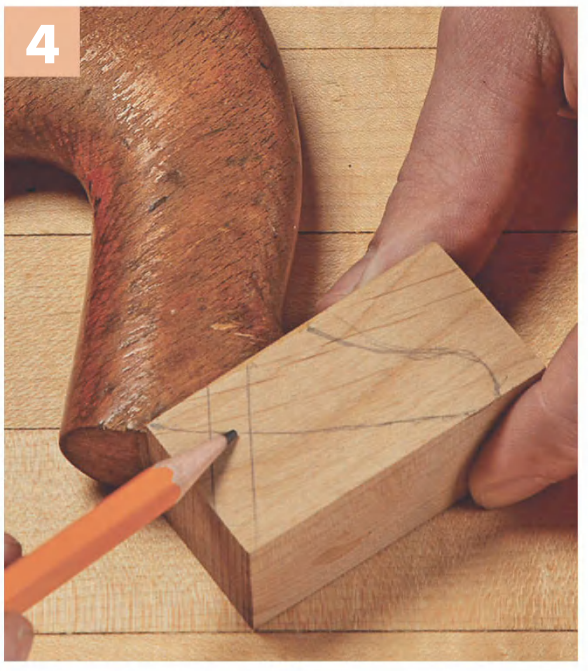

Draw out the profile of the horn. If your patch is going to cover the bolt hole on your tote, lay that out as well.

Cut the tote to shape at the band saw. To get a perfectly smooth and curved top, give it a pass on the edge sander.

The final shape of the tote is achieved by hand. Clamp the tote in a vise, then use files, rasps, and sandpaper to refine it.

The grime and gunk that caked these pieces was taken off easily enough with a brass brush, but it took up to two days in a rust bath to get some pieces brightened up.

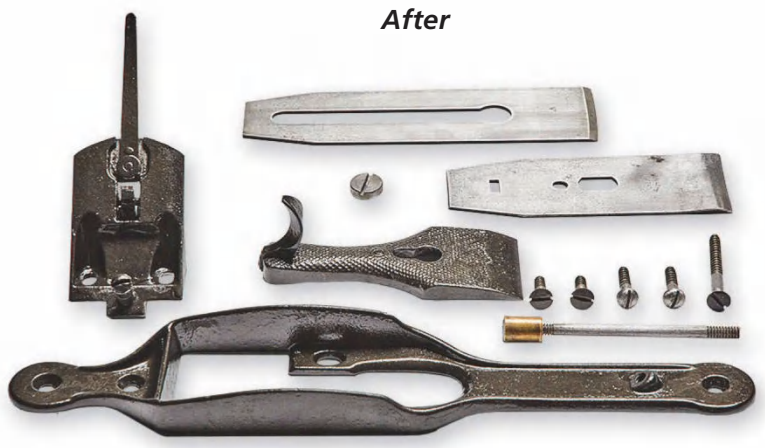

After coming out of the rust bath, the pieces were given another scrubbing and a light sanding with high-grit paper. The originally black pieces were painted black once more.

replacement does cover part of the screw hole, now is the time to get out a drill and re-drill the hole.

SPRUCING UP THE CASTINGS

The last pieces of this plane puzzle were the castings. As you can see above, most of the paint had chipped off and rust covered a good portion of the metal.

First, I had to get the grime off. A brass brush did a good job of removing the dirt without marring the steel. After the big chunks were off, it was time to address the rust. Because of the sheer amount on these castings, I chose to soak the castings in a rust remover. I checked them periodically, and after two days the rust was gone.

FINISHING THOUGHTS

With all my parts rehabilitated, I only had to finish them. I sprayed a coat of paint on all the castings that orginally had been painted. For the wood, I had first wanted to do laquer, as the Stanleys originally were, but I ended up using Danish oil. This is just personal preference: I like that I can just re-oil it if it needs work again. A last coat of wax gave it a smooth, satin finish.

After a little sharpening, the plane is up and running. This restored Stanley now has a home making shavings in my shop. W

TUNG OIL WOOD STAIN

Exterior & Interior

NOVA EXO SHIELD

Longest Lasting

Maximum UV Protection
Deep Penetrating Oil

novausawood.com/exoshield

*Ipe hardwood deck finished with ExoShield Walnut.

Smart Shop Solutions

Square steel column legs help your bench stay sturdy and reliable.

If you need to add worksurfaces and storage to your shop quickly because of projects piling up, help is on the way. First, there are two pre-made leg products that let you put a bench together fast. Then we'll look at some custom pegboard hangers that help you streamline and expand the use of the space above your bench.

SHOP FOX HEAVY-DUTY LEGS

For a heavy-duty workbench, the bench leg system from *Shop Fox* is a good option (photo above). It makes a nice-sized bench at 56" long and 28" deep (base measurements). The top and shelf aren't included, but this system does come with rectangular cross braces, hardware, and adjustable feet, in addition to the legs.

Written by: Erich Lage

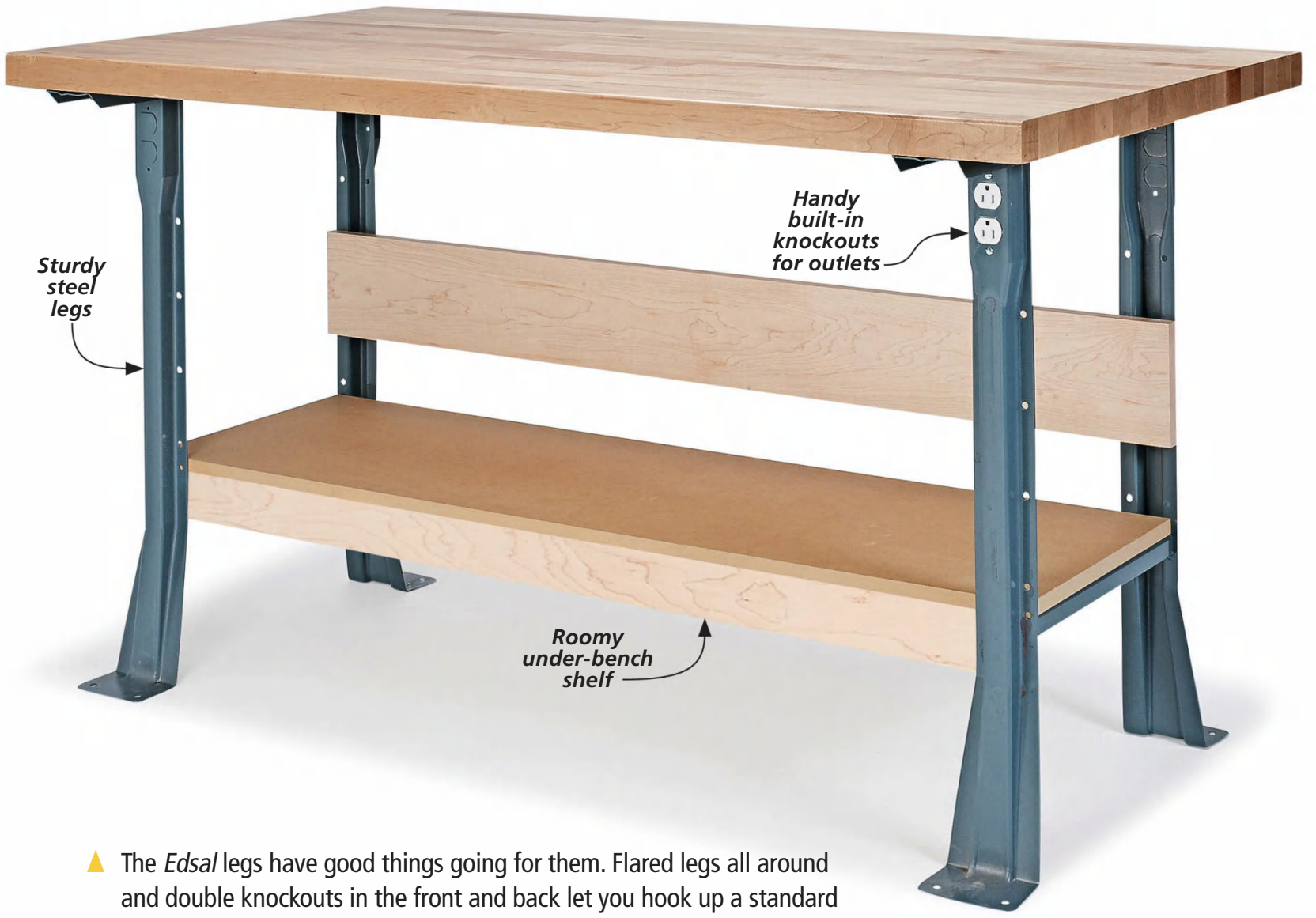

▲ The *Edsal* legs have good things going for them. Flared legs all around and double knockouts in the front and back let you hook up a standard electrical box where you need it for easy access.

This system features square column legs made from galvanized steel for extra stability. The adjustable foot pads allow you to level the bench on uneven floors. And the off-white, powder-coated paint rounds out the look of this bench nicely.

The building process is simple with bolt-together construction, and the steel cross-braces include a lip for adding a ¾" plywood or MDF shelf. This leg system is sure to give you a rock-solid bench that's ready to handle anything. The leg system and other parts are available at *Grizzly.com*.

EDSAL FLARED LEGS

What sets these *Edsal* legs apart from the others is their flared "foot" at the bottom. This not only provides a throwback look, but it gives the bench a wider footprint for greater stability.

With a depth of 36", 14-gauge steel, and a fixed height of 32", this pair of legs makes a great base for a workbench. And they have a powder-coated finish.

These welded legs not only come pre-punched to accommodate a top and shelves, but they also have double electrical knockouts. Both the front and back legs accept a standard 1⅞" electrical box for easy access to electrical power.

Once this bench is all put together, it'll take on a 6,000-pound load. Adding a stringer (stretcher) makes the frame of the bench more rigid. You can buy a steel stringer from *Edsal* (also available on Amazon), or make your own tailored version out of plywood or solid wood.

Above the Bench

Pegboard storage in the shop is an efficient way to keep the tools you use the most close at hand. To expand the range of tools you can keep at the ready, the folks at *Toolhangerz* have designed a line of custom-made, powder-coated steel hangers that let you organize just about every tool you have. What we're showing on these pages isn't their full line of hangers, but it's a good representation. Each hanger is a real mutli-tasker. You can buy the hangers individually, or in a "Pro Pack," online at *Toolhangerz.com*. W

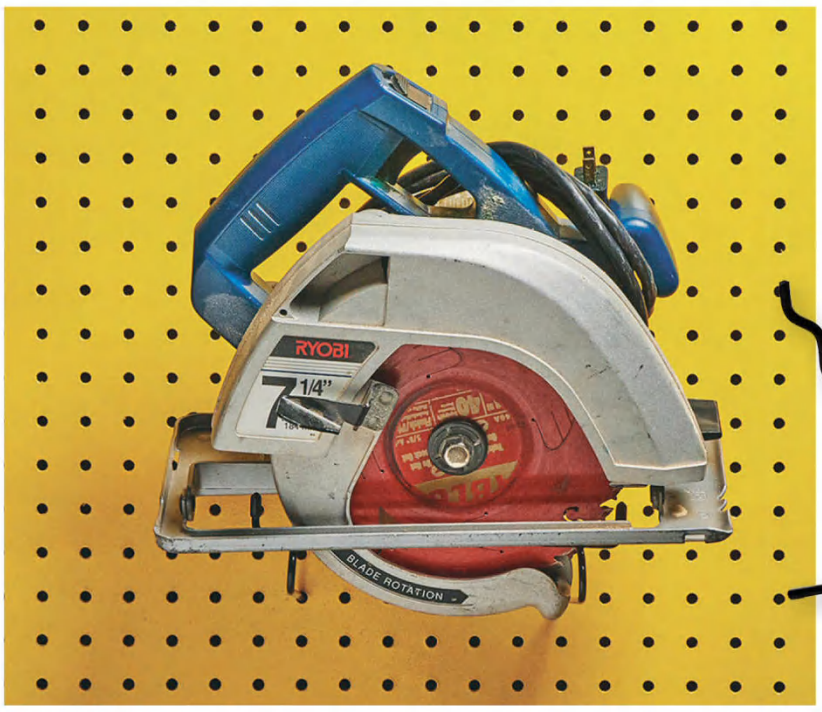

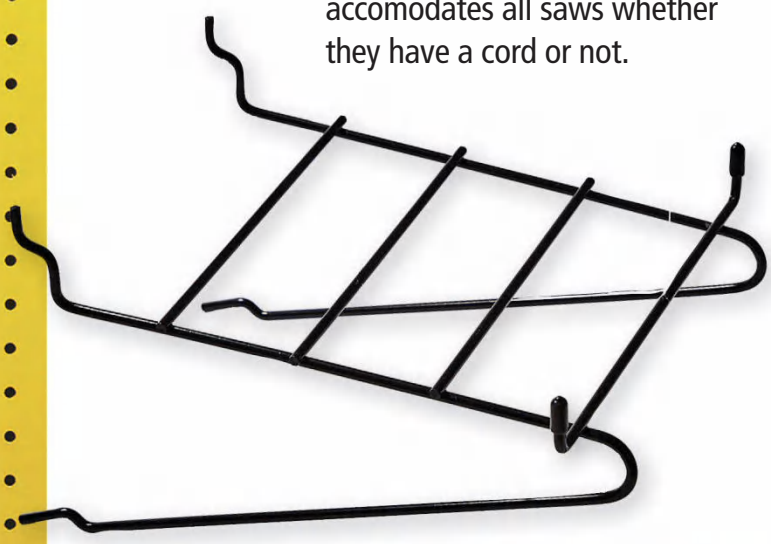

▼ The **Circular Saw Hanger** accomodates all saws whether they have a cord or not.

► Like the saw hanger, the **Vertical Drill Hanger** stows all manner of drills.

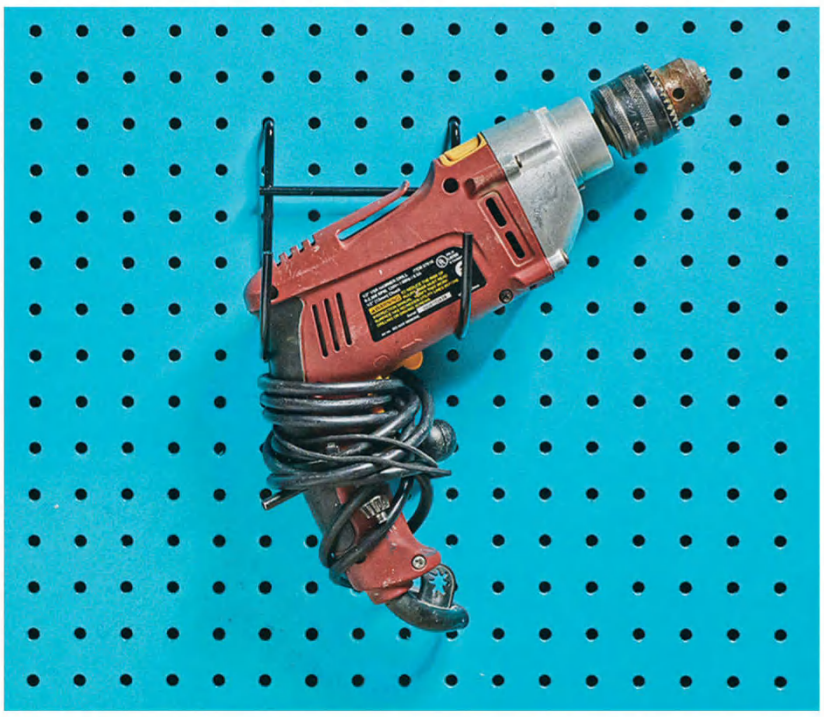

◄ The **14" Shelf** is useful in many ways. There's a 10" version available also.

▲ The **Battery Hanger** is a yes. But it also works for your handheld router.

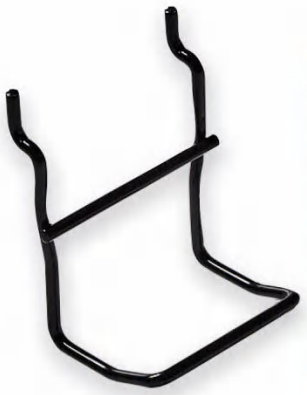

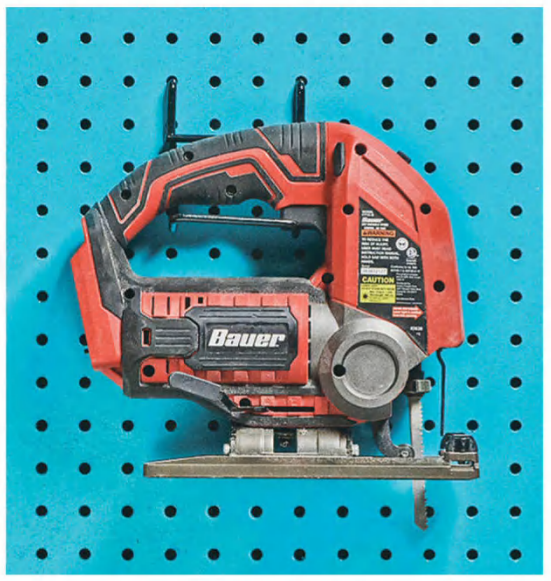

► The **Small Universal Hanger** stores all manner of small tools.

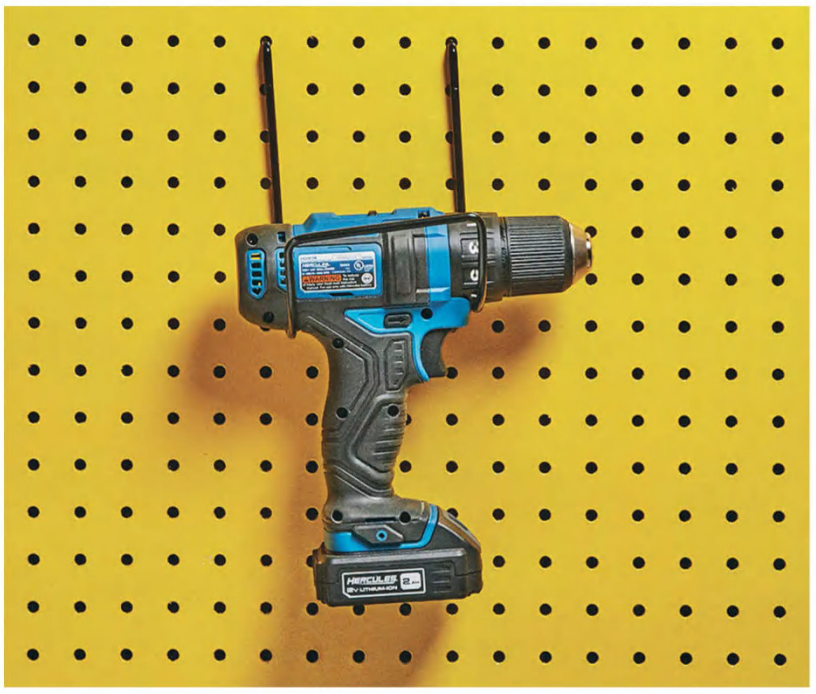

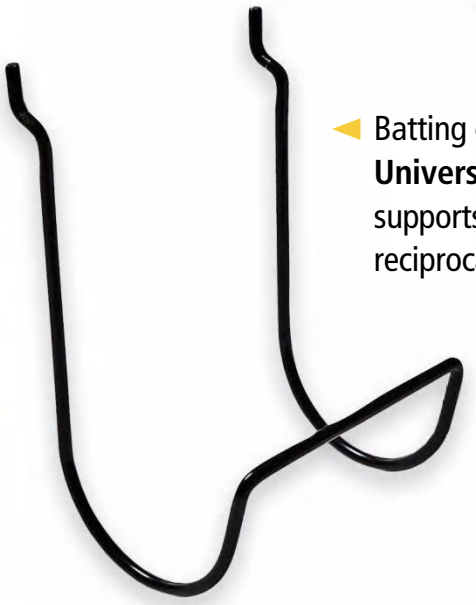

◄ Batting cleanup is the **Large Universal Tool Hanger** that supports everything from drills to reciprocating saws — impressive.

EST 1928

WOODCRAFT®

HELPING YOU MAKE WOOD WORK®

Scan To Receive A FREE Catalog.

To Find Your Local Woodcraft Store, Visit Woodcraft.com Or Call 800-225-1153.

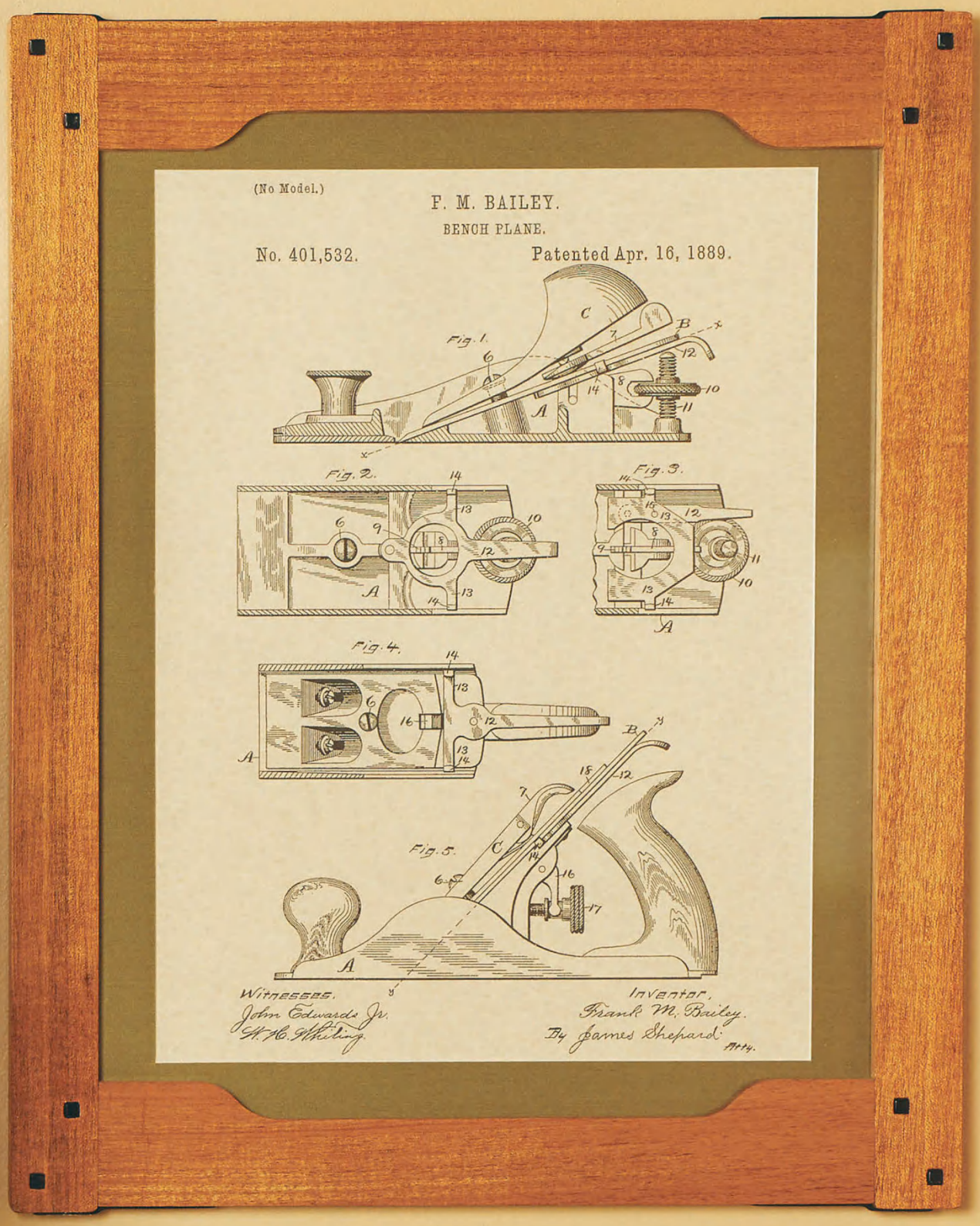

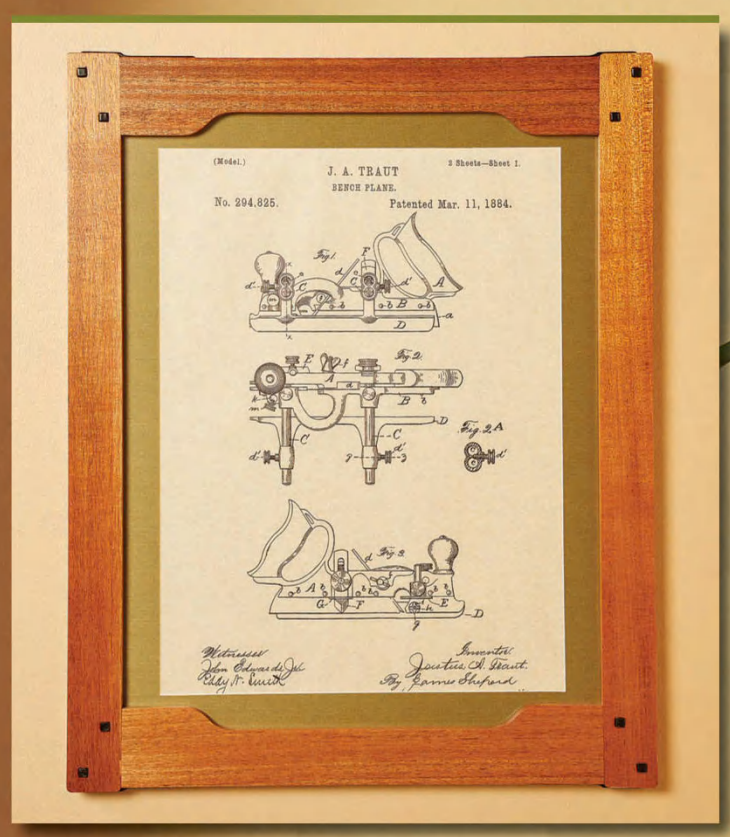

The poster shown in the good-looking frame is one of four handsome prints you can purchase at *Store.Woodsmith.com/products*.

Written by: Erich Lage; Project Design: John Doyle

▲ The not-so-perfectly pillowed ebony plugs and splines knit well with the slightly rounded stiles and the cloud lifts in the rails.

G&G-style Picture Frame

Here's a subtle and sinuous treat to sink your woodworking chops into. A picture frame that's strong and sturdy, yet full of grace and charm.

There's nothing quite like the distinctive look of Greene & Greene homes and the furniture that resides there. Yes, the brothers Charles and Henry Greene designed most of the furniture and even light fixtures for their homes. To keep the harmony flowing, all the early pieces were built by another set of brothers, Peter and John Hall who clearly understood how to weave the magical details into each of the many unique and beautiful specimens.

Our picture frame boasts some of those classic details. The ubiquitous cloud lift that you see in the rails. The organic off-set that lies between the rails and stiles, gracefully shunning square corners. Last, but far from least, the contrasting dash and dot of the ebony plugs and splines. So that's the Arts & Crafts lay of the land for this project, see you in the shop.

▼ If you're looking for more projects from this handsome family of the Arts and Crafts era, the picture frame pairs nicely with the Greene & Greene hall table we featured in issue 204 and the bookcase in 234.

Illustrations: Becky Kralicek

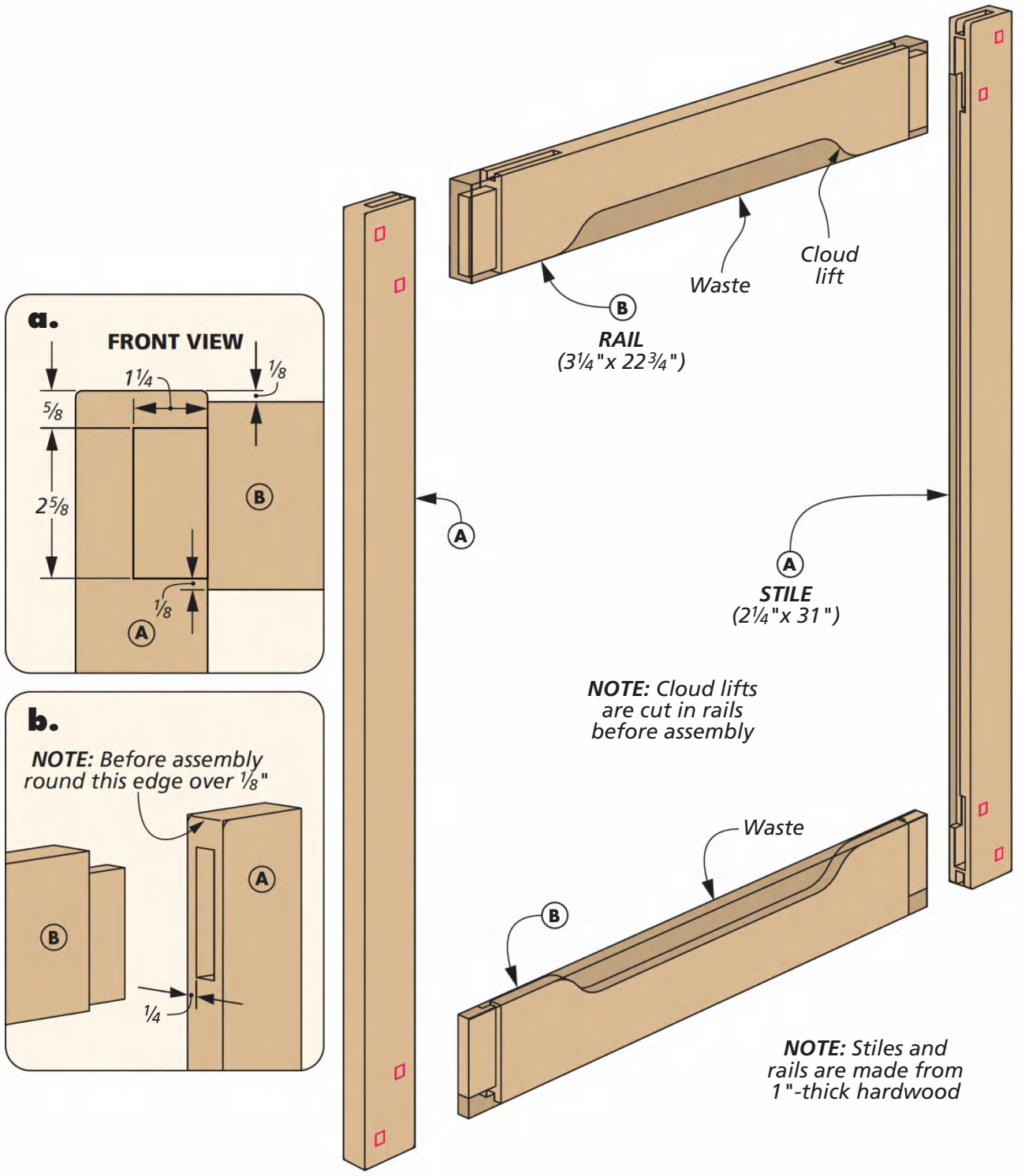

Shaping the STILES & RAILS

After sizing the parts for the stiles and rails, set the rails aside for the moment and focus on the stiles. First up is making the mortises for the tenons on the rails. Use a Forstner bit in your drill press to rough out the mortises (Figure 1, below). To keep things uniform, it's best to gang the stiles together when laying out the mortise locations. Square up the corners with a chisel when you're done at the drill press.

SOFT EDGES. Adding a small radius to the front and back edges of the stiles enhances the organic look of the frame (detail 'a'). The edges are created with a gentle touch at the disc sander. Later, after the frame is assembled, break the remaining edges with a sanding block. Now let's work on the rails.

RAILS. As you see in the drawing to the left, the rails are wide enough to accommodate the cloud lift profile. Before tackling that, head over to the table saw and cut the tenons on the ends of the rails. To ensure a good fit,

MORTISE & TENON

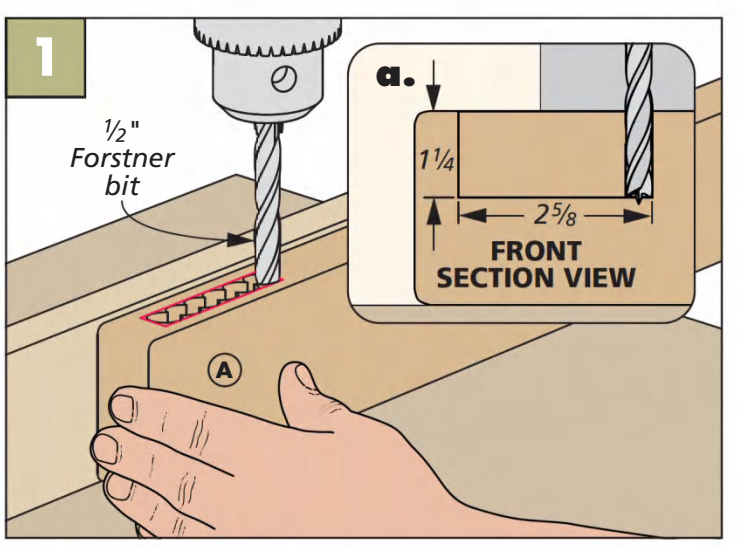

Mortise First. The mortises for the rails are easy to make at the drill press with a Forstner bit. A sharp chisel cleans up the corners and walls.

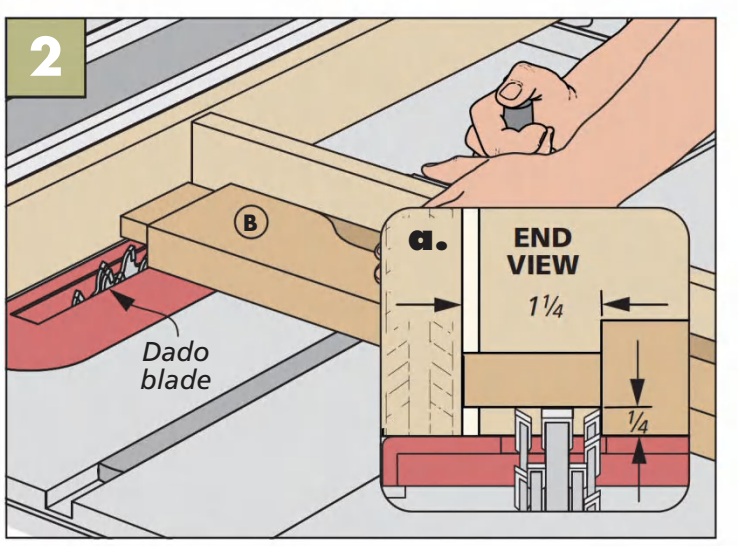

Tenons at the Table Saw. The rip fence of the table saw acts as the stop that defines the shoulders of the tenons on the rails.

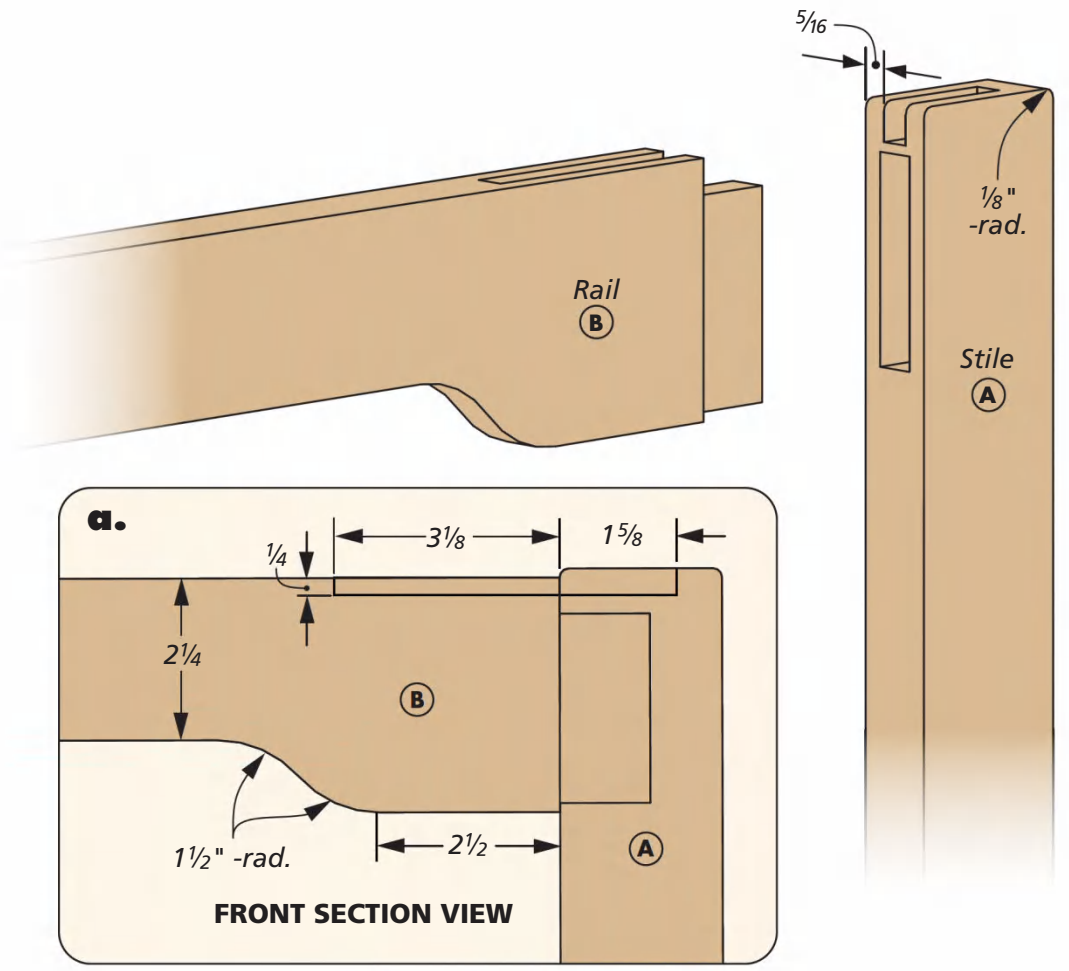

I cut a small tenon on the end of the rail and tested it in the mortise. Then I cut the cheek shoulders and nibbled away the rest of the waste (Figure 2).

As for the offset edge shoulders, you'll need to stand the rails up to make those cuts. Now it's time to make some grooves in the edges of both parts.

STOPPED GROOVES

Detail 'a' above shows you the groove you need to make in ends of the stiles and edge of the rails. Since the rails are inset from the edge of the stiles it's easier to create the grooves needed before the parts are glued together. So grab the pieces and head to the router table.

These are stopped grooves, so you'll need to lay out the location of the leading edge of the bit on the face of the router table fence. Also, run a stopping line around the edges of the stiles and rails as needed. You can see this in action in the box above. The grooves in the rails are straightforward (Figure 1). For the stiles, stand the board on end and use a backer to stabilize the board while making the groove (Figure 2). Notice the groove is deeper on the stiles. Next up is creating the cloud lift on the bottom edge of the rails.

CLOUD LIFT. A cloud lift is a hallmark of the Greene & Greene style. Two identical radii cross paths a modest distance from the ends of the rails (detail 'a' above). After roughing out the cloud lift at the band saw, you can smooth the profile with the template shown below.

STOPPED GROOVES

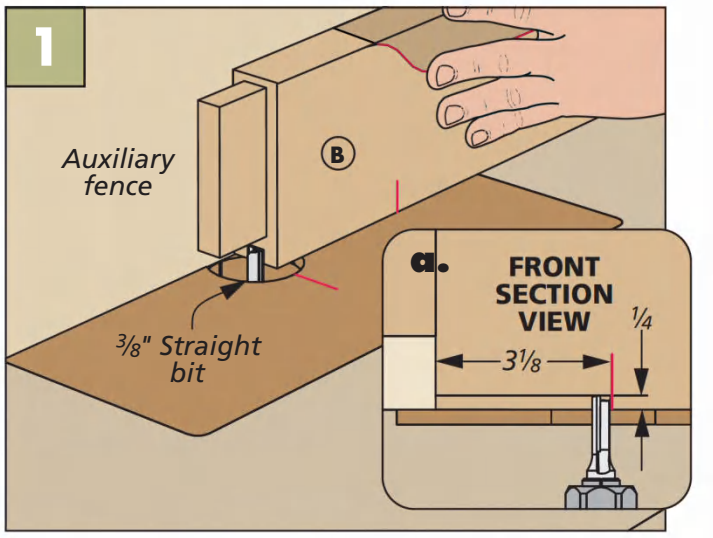

Rails First. Use a straight bit at the router table to create the stopped grooves for the long tails of the splines.

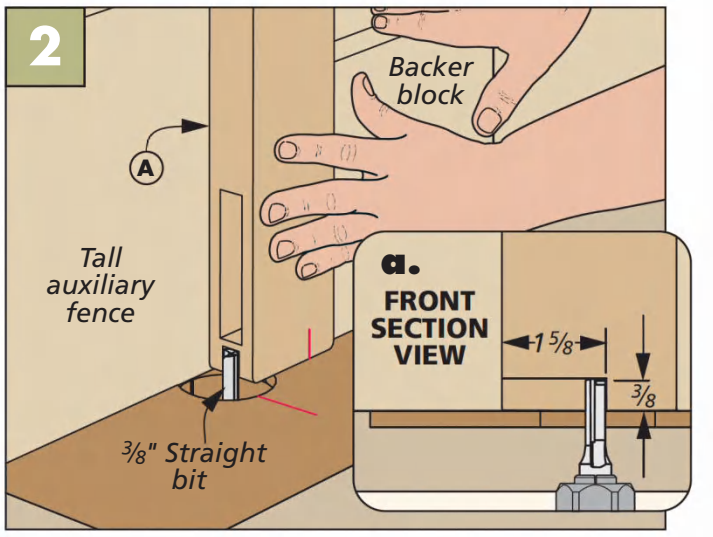

Stiles Second. The method is basically the same for the stiles. But you'll want to use a backer block to support the workpiece.

CREATING A CLOUD LIFT

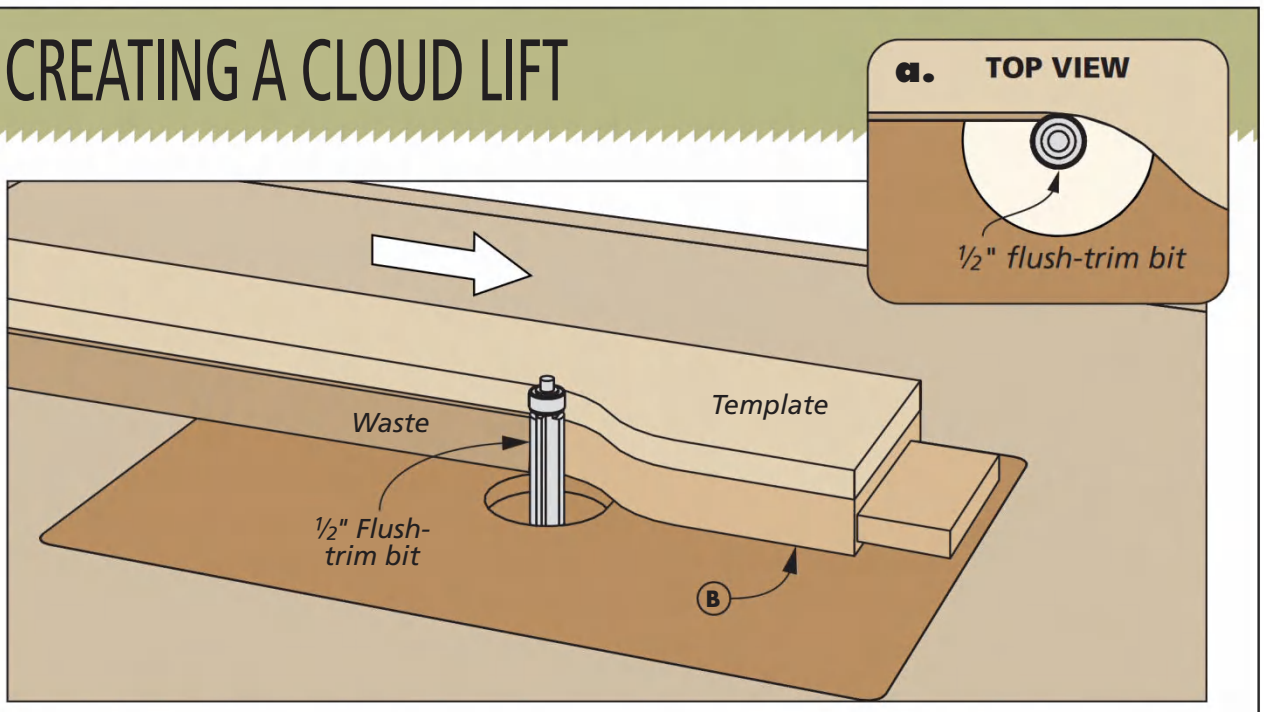

Template Time. If you want to make a template for the cloud lift, the information you need is in detail 'a' at the top of the page. Then it's off to the router table.

ROUTING THE RABBET

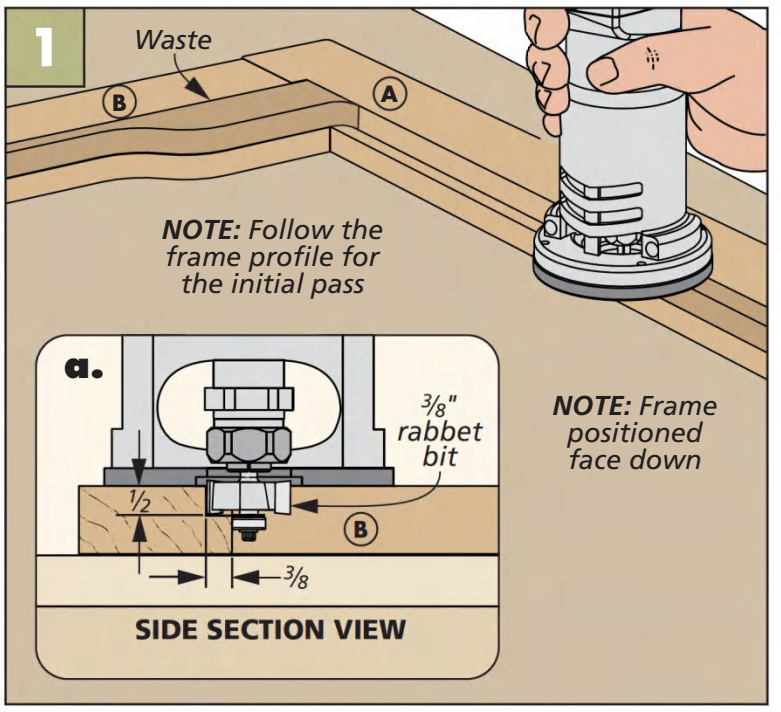

Basic Rabbet First. A rabbeting bit in your palm router creates the rabbet in the stiles and the front edge of the rails.

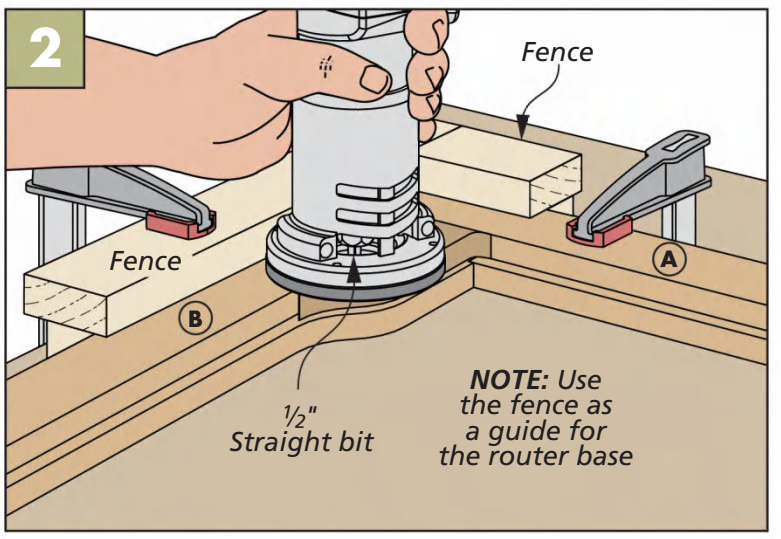

Add A Fence. The fence you see above lets you complete the rectangle of the frame. Change to a straight bit for this step.

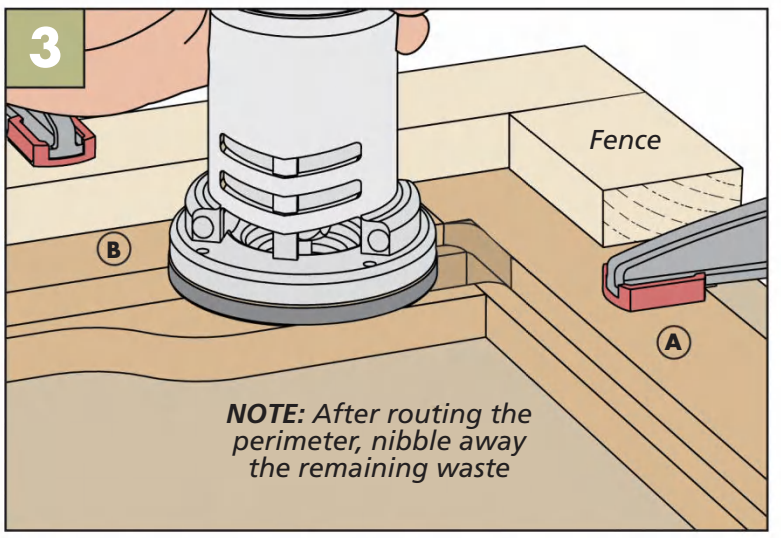

Complete Cloud Lift. Now that you've established the rabbet's perimeter, you can remove the rest of the waste in the area of the cloud lift.

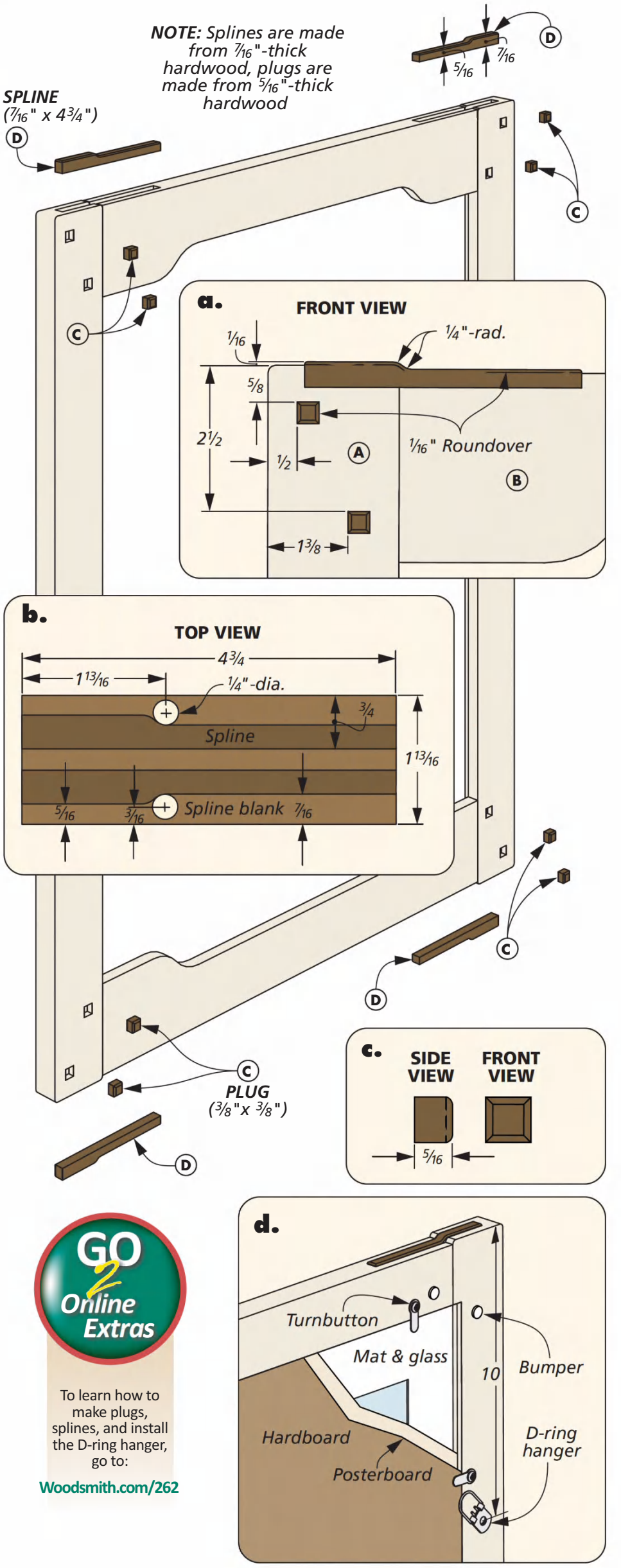

To learn how to make plugs, splines, and install the D-ring hanger, go to:

Woodsmith.com/262

SQUARE HOLES

First, drill an undersized hole, then remove the bit and insert it back in the hole.

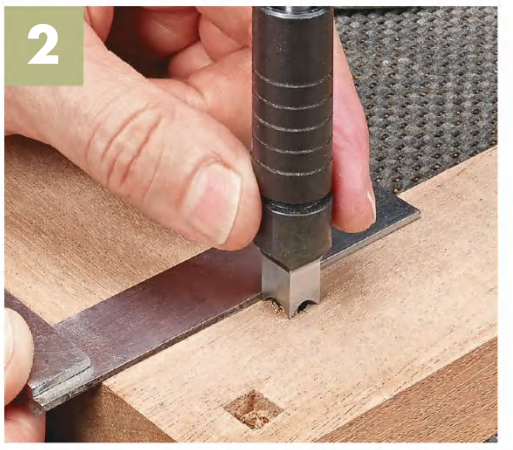

Slip the hole punch over the drill bit and use a square to align the edges of the punch with the frame.

When all is square, remove the drill bit and tap the punch to form the square hole.

Adding **DECORATIVE TOUCHES**

After gluing up the frame you can focus on the few tasks left to finish up the project. Lets start with the rabbet in the back. As you see in Figure 1 on the previous page, a rabbeting bit in my handheld router takes care of most of the work. But there's additional waste that needs to be removed from the area around the cloud lift profile.

To do this I made a simple L-shaped fence that lets me continue the rabbet into the corner (Figure 2). After installing a straight bit in the router, I ran the base along the fence to establish a rectangular rabbet. Then, as Figure 3 shows, it's just a matter of clearing out the remaining waste. After a little chisel work, you've got a square opening in the back of the frame. Next up is creating the square holes on the front of the frame.

SQUARE HOLES. If you have a mortising machine, life is golden for this part of the project. Here we'll walk you through making the holes without a fancy machine. The box above guides you through the process. The square hole punch used in Figure 2 and 3 is from *Lee Valley (50K5906)*. When you've tidied up from that step, you've completed the work on the frame itself.

Now we need to make plugs and splines that add the signature look to the frame. They're made from ebony to provide contrast. Plugs first.

PLUGS & SPLINES. There's a jig online at *Woodsmith.com/262* that shows a safe way to make the plugs you see in detail 'c' on the previous page. The splines are a little more work, but you start out in a similar manner — an oversized blank. Detail 'b' shows the blank that lets you safely make two splines at a time at the band saw. Shaping the pillowed top edges of the splines is done by hand, which plays to the organic look of the frame. When they're glued in place, you can focus on the little bit of hardware that's needed for the frame.

Detail 'd' shows where to install the D-ring hangers on the back side. Don't leave them in the frame while you apply the finish, you're just creating memory holes for the hangers. Cut the posterboard and hardboard back to fit. Then space the turnbuttons across the stiles and rails as needed.

FINISHING TOUCHES. I chose to have a local frame shop cut the mat and glass. (There's always that remnant spec on the inside of the glass that torments me.) Either way the frame is ready to show off your favorite art poster. W

Materials, Supplies & Cutting Diagram

A	Stiles (2)	1 x 2¼ - 31	• (8) 1" Ribbed Turnbuttons
B	Rails (2)	1 x 3¼ - 22¾	• (1) D-Ring Hanging Kit
C	Plugs (8)	5/16 x 3/8 - 3/8	• (8) Rubber Bumpers
D	Splines (4)	3/8 x 7/16 - 4¾	

1" x 7" - 60" Mahogany (3.6 Bd. Ft.)

½" x 2½" - 10" Ebony (0.2 Sq. Ft.)

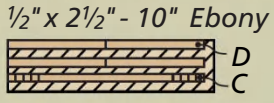

ALSO NEEDED: *One 48" x 48" Sheet of ⅛" hardboard, 20⅞" x 26⅞" Glass, Mat and Posterboard*

Written by: Phil Huber; Project Design: Chris Fitch

Coping Saw

The frame of this coping saw finds its strength in the layered combination of aluminum and ash.

Mention "shop-built hand tools" and a few images likely spring to mind. Maybe it's a wood hand plane a la James Krenov, or wood layout tools, or even a simple shop knife.

Creative Director Chris Fitch aims for this coping saw to expand the concept into something a little more complex. At the same time, the project should be as accessible as possible to woodworkers.

Metalworking can be a stumbling block for toolmaking. Chris' solution is to use a high-strength aluminum alloy. This means that the hardware components you see in the photo at left can be made easily with tools you probably already have in your shop. Another benefit to the aluminum is its light weight. That made it ideal for the frame.

WORKSHOP SIDEKICK. Coping saws tend to be underappreciated, even by hand-tool woodworkers. And frankly, most commercial versions are average at best. I've found that a coping saw is an ideal sidekick to your other hand saws for creating curves or cutouts that other saws can't handle.

A well-made, top-performing tool invites you to use it more often. So it's time to build.

▲ The hardwood parts are made from ash, including the turned, tapered handle. The wood is strong and resilient. The simple profile is easy to shape, even if your turning skills are a little rusty.

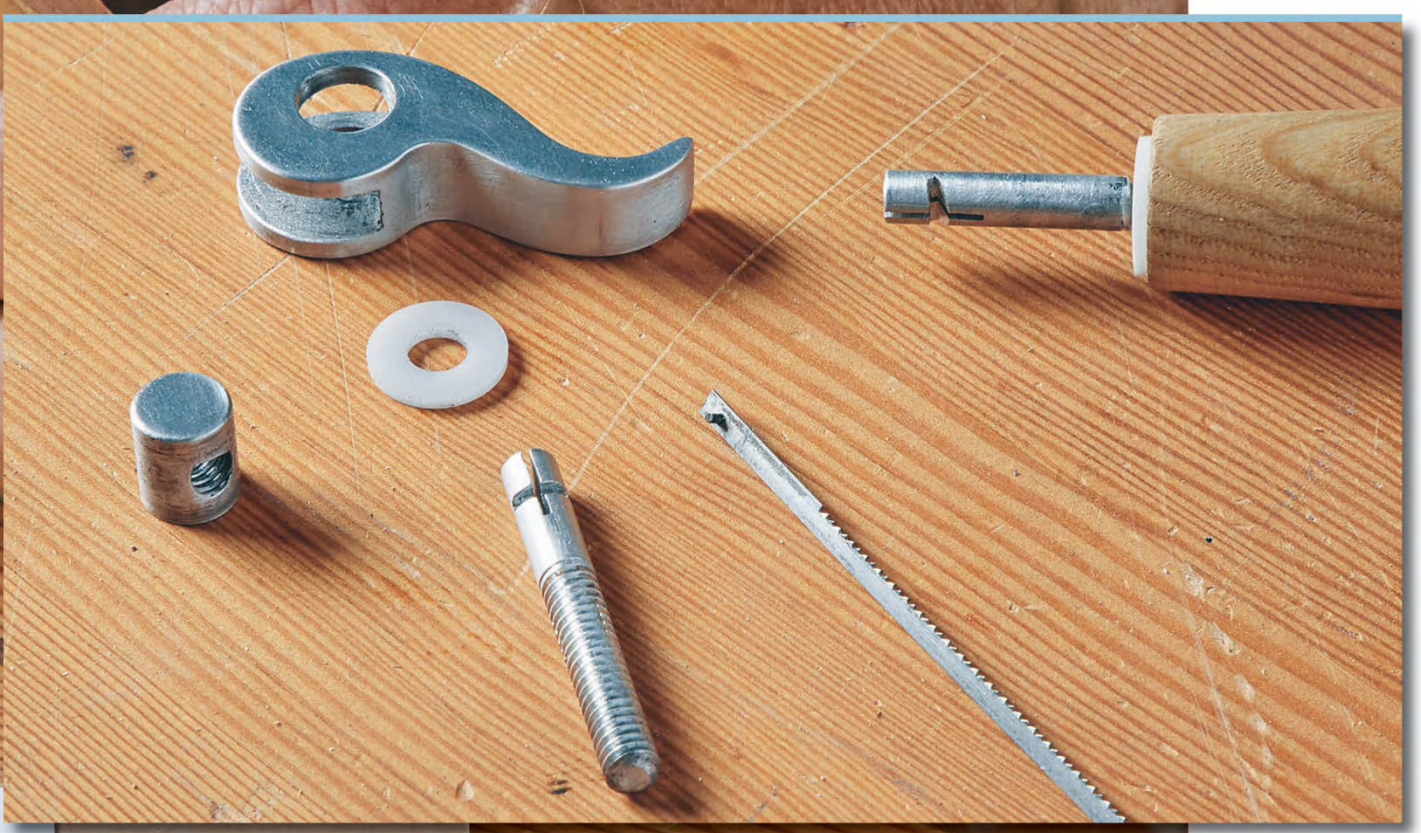

▼ High-strength aluminum is lightweight and easy to shape with woodworking tools. The cam lever, blade holders, and cross dowel are all custom-made from aluminum bar and rods.

Illustrations: Dirk Ver Steeg

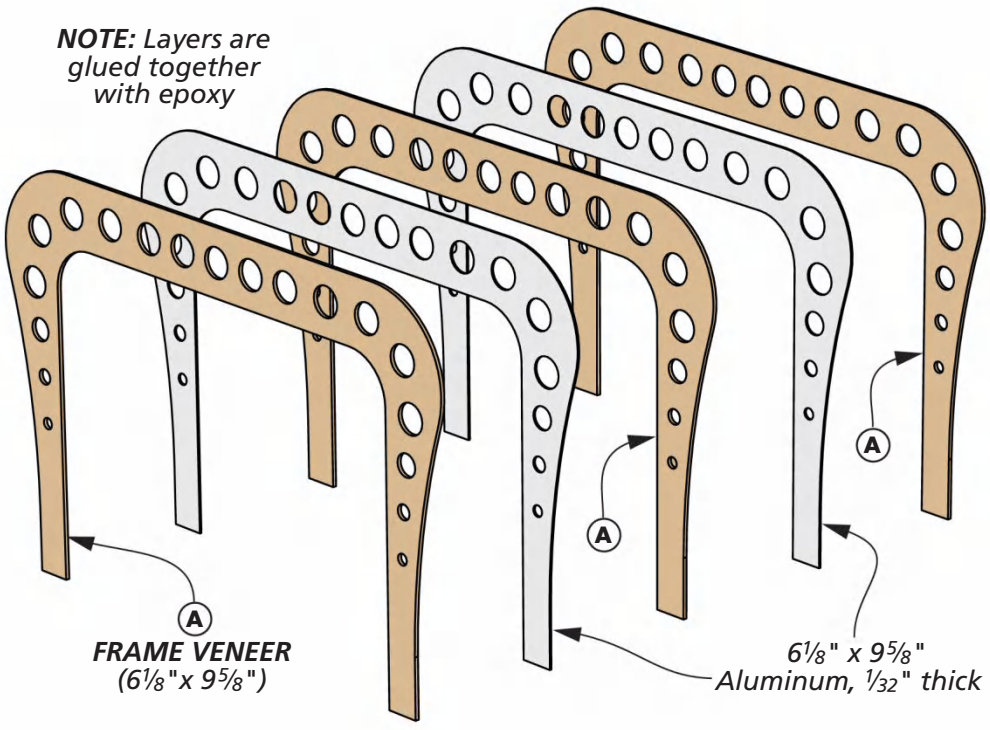

NOTE: Veneer layers are resawn to 1/16" thick

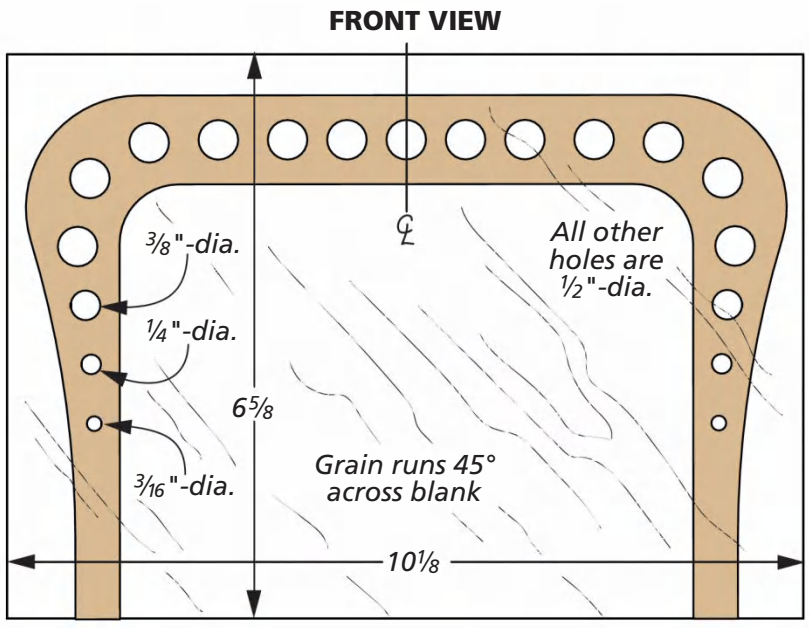

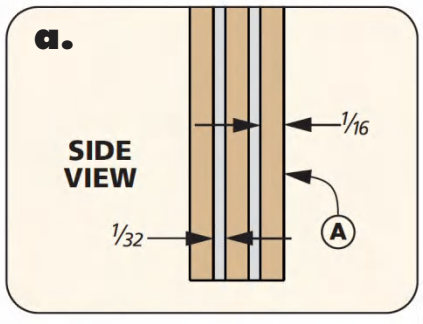

Laminating a RIGID FRAME

The defining element and most important part of the coping saw is the frame. It holds the blade in tension and allows it to cut deep into a workpiece.

The challenge is meeting this goal without making it heavy. The solution is a five-layer Dagwood-style sandwich, as shown in the drawing above. Three layers of wood veneer envelop two layers of thin aluminum.

VENEER. Your starting point is the veneer. I resawed veneer from a large blank of ash. There are a couple of things to note. The first is that the grain is oriented so it runs 45° across the frame. This adds resistance to twisting.

The other item of note is that you're shooting for a final thickness of 1/16". So I resawed the blanks a bit thicker and sanded them to final thickness.

Another veneer option to consider is laminating commercial veneer pieces to build up to the required thickness. Be sure to select a strong hardwood: maple, white oak, hickory.

EPOXY GLUEUP. I glued up the veneer layers of the frame with two layers of aluminum, as shown in Figure 1 below. I used *West Systems* epoxy. The frame remains in clamps overnight while the epoxy cures. The longer epoxy takes to cure, the stronger it is. So this isn't the place for the five-minute stuff.

SHAPING THE FRAME. The drawing above gives you the details for

FINE DETAILS FOR THE FRAME

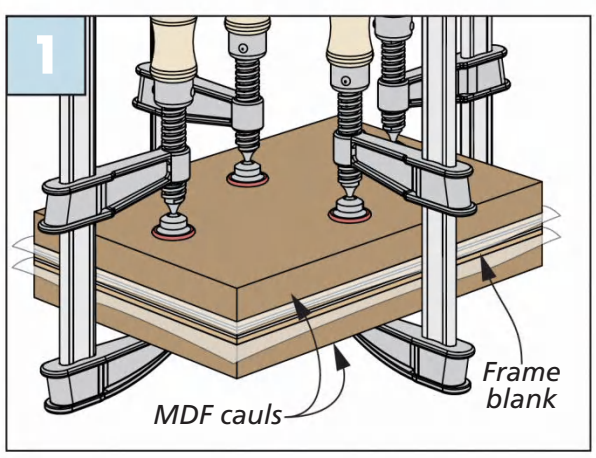

Epoxy Sandwich. Waxed paper keeps the blank from adhering to the MDF clamping cauls.

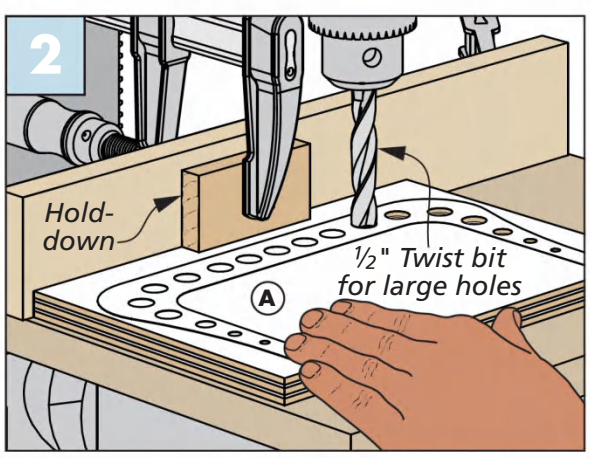

Relief Holes. While the blank is oversized, drill the weight relief holes using the pattern available online.

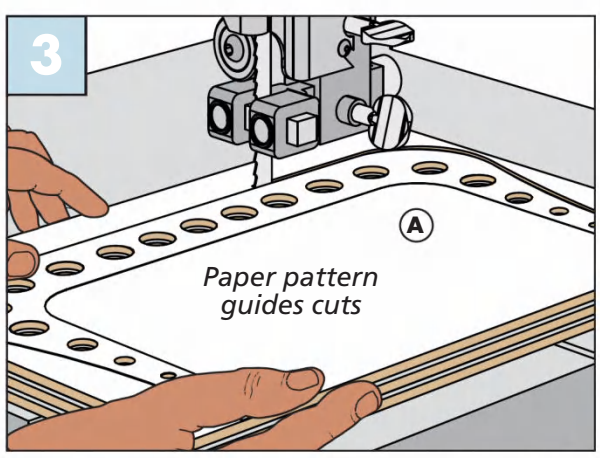

Yup, Band Saw. A regular blade works well to cut the frame to shape. Careful cutting means less sanding.

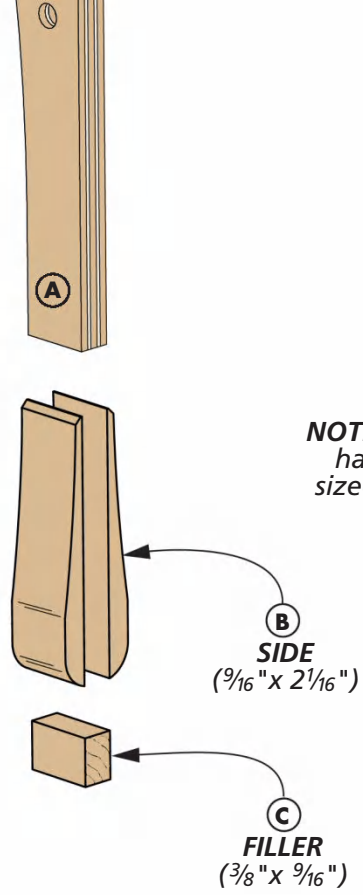

NOTE: Sides are 3/16"-thick hardwood. Fillers are sized to match thickness of the frame

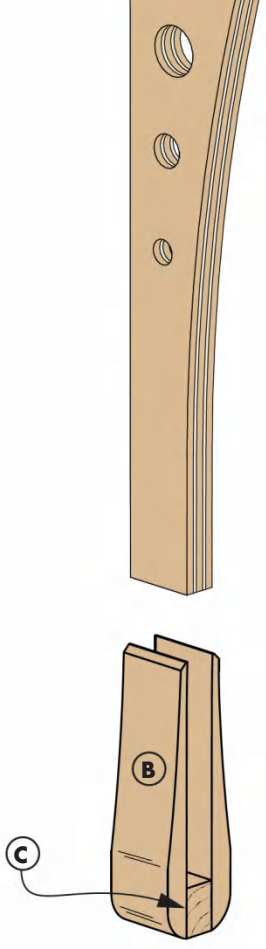

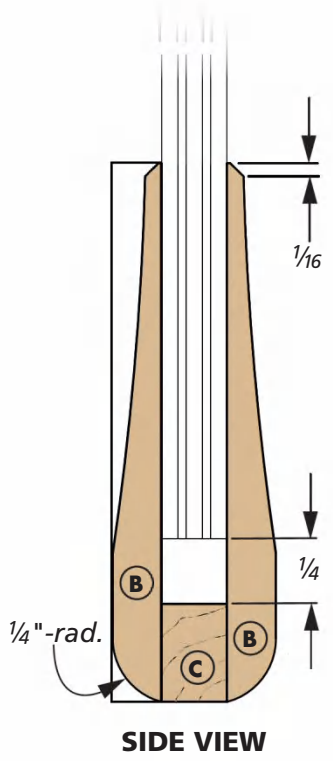

For full-sized patterns of the saw parts , go to:
Woodsmith.com/262

cutting the frame to size and drilling the holes. It's a good idea to drill the holes in the frame first, as you can see in Figure 2. The larger blank resists twisting and lifting. Speaking of lifting, clamping a block to the drill press fence prevents the frame from climbing.

From there, it's over to the band saw (Figure 3). And yes, your typical band saw blade will do just fine cutting the thin aluminum layers in your frame sandwich. Stay as close to the layout lines as you can to minimize the cleanup work.

Go easy at the disc sander while smoothing the frame, as in Figure 4. Epoxy is sensitive to heat and aluminum is a great heat conductor. You don't want the frame to delaminate or to get a burn. Final smoothing can be done with files and sandpaper. These are also what I used to refine the inside of the frame.

BLADE HOLES

In order to accept a blade, you need to add the elements shown in the drawing above. This creates a hole for the hardware components you make later.

Glue a pair of hardwood sides to each leg of the frame, as you can see in Figure 5. The distance between the sides determines the size of a filler block that gets glued at the end of the sides (Side View above).

A LITTLE REFINEMENT. Take some time now to shape the sides and fillers to match the frame. The lower ends are rounded. The sides are tapered as they blend in with the frame. Figure 6 shows this step using the end of a belt sander. You could also use a sanding drum installed in the drill press.

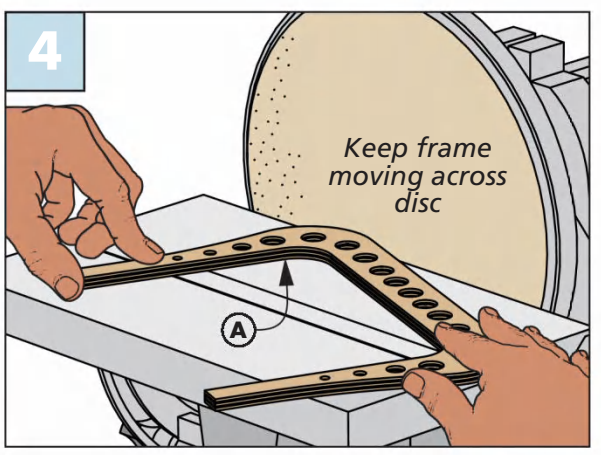

Refining. Use light passes at the disc sander to avoid heat buildup. A sanding block at the end leaves a smooth edge.

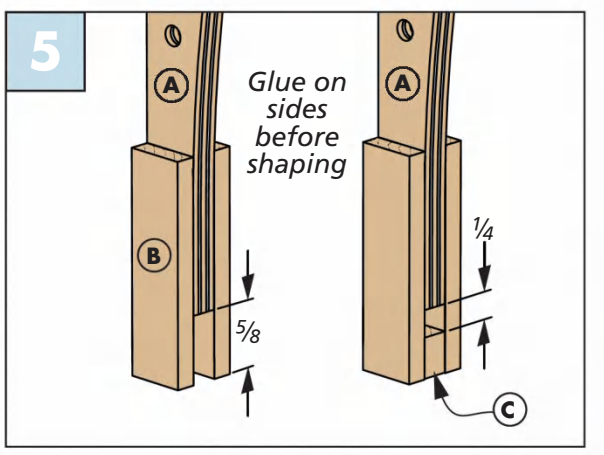

Square Sides. The hardwood sides and fillers provide anchor points for the hardware that holds the blade.

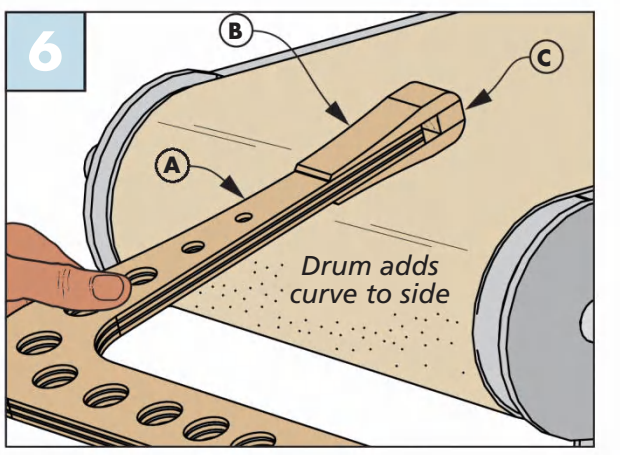

Curved Taper. The round end of a belt sander shapes a curved taper to transition the sides to the frame.

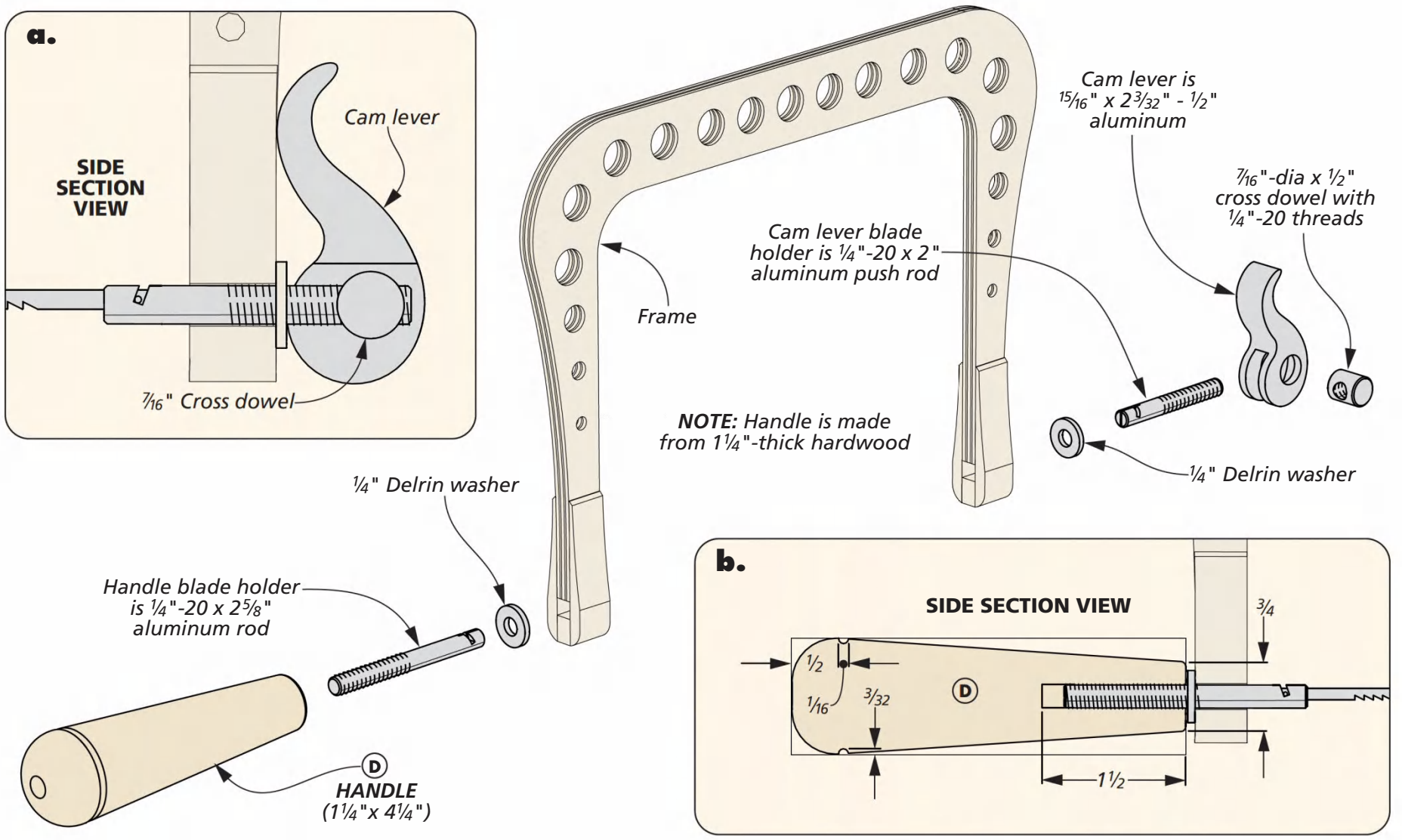

Comfortable HANDLE & CUSTOM HARDWARE

There's just a little woodworking left on this project — that's the handle. From there, it's on to some metalwork.

TAPERED HANDLE. Detail 'b' above shows the fine points that you'll need to turn the handle. I started with an extra-long square blank held in jaws on the lathe. A pilot hole is drilled in the end to house an aluminum rod, as shown in Figure 1 below. Then tap the hole for ¼"-20 threads.

From there, turn the handle to shape and cut it free of the blank. I used carbide turning tools for this step, since they're well suited for folk like me who don't turn that often. Use whichever tools suit your preference.

METAL BITS. The metalwork begins with making a pair of blade holders, as shown in the drawing above. One threads

HANDLE & BLADE HOLDERS

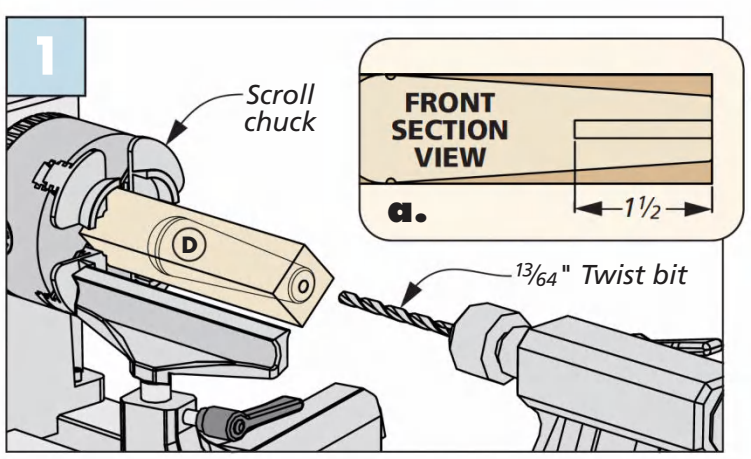

Turned Handle. A drill chuck in the tail stock lets you drill a perfectly centered pilot hole in the handle blank prior to turning.

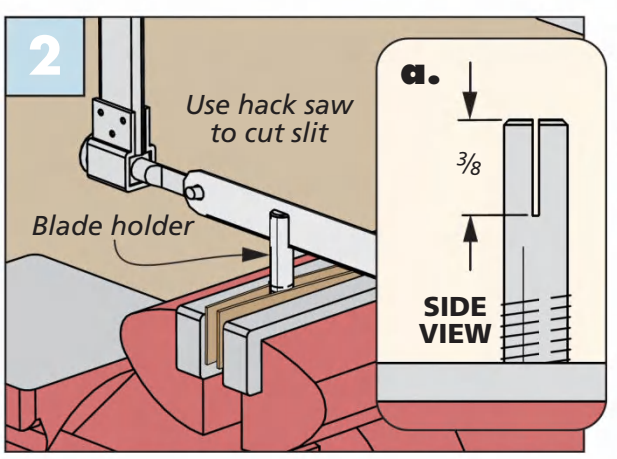

Blade Slit. Padded jaws in a bench vise protect the threaded blade holder while you cut the blade slot.

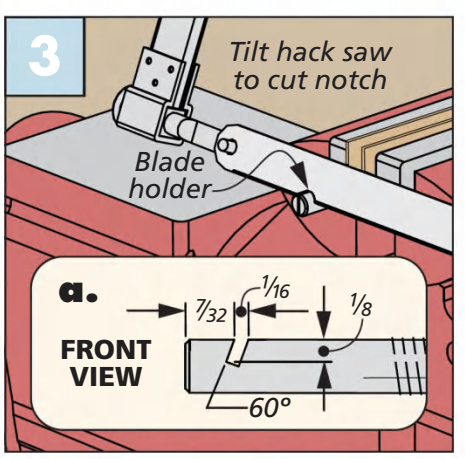

Notched. Saw and file a notch to accept the pin on the end of a coping saw blade.

into the handle. At the other end, a shop-made cam lever pulls the blade into tension.

The holders are made from connecting rods that have threads on one end. Details 'a' and 'b' show the overall lengths to cut the holders to.

On the other end you cut a slit with a hack saw to accept a coping saw blade (Figure 2 on the previous page).

Cut an angled slot to house the pins on the end of the coping saw blade. This is shown in Figure 3. I used a thin warding file to refine the notch so the pin slips into place easily. At this point, you can carefully thread the longer blade holder into the saw's handle.

CAM LEVER. The other holder threads into a cross dowel and cam lever. The cam is made from a length of bar stock. The pattern for the lever is at *www.Woodsmith.com/262*. The box at right walks you through the primary steps. Clean up blade marks and ease the edges with files and sandpaper. This should be comfortable to operate.

Figure 4 shows making the cross dowel. It's drilled, then tapped while part of an extra-long rod. After cutting it to length, fit the dowel into the cam. Then thread the blade holder in place.

FINE-TUNING. Install a blade into the holders and rotate the cam. If the blade isn't taut, you can thread the holder farther into to the cross dowel. But there is only so much room to do this without affecting the function of the cam lever. You may have to cut the threaded section down a bit and test the blade again. The cam should have a satisfying snap as it applies tension.

Apply a coat of finish on the wood parts and a little dry lube to the cross dowel. Then you can put your new saw to work. W

QUICK-ACTION CAM

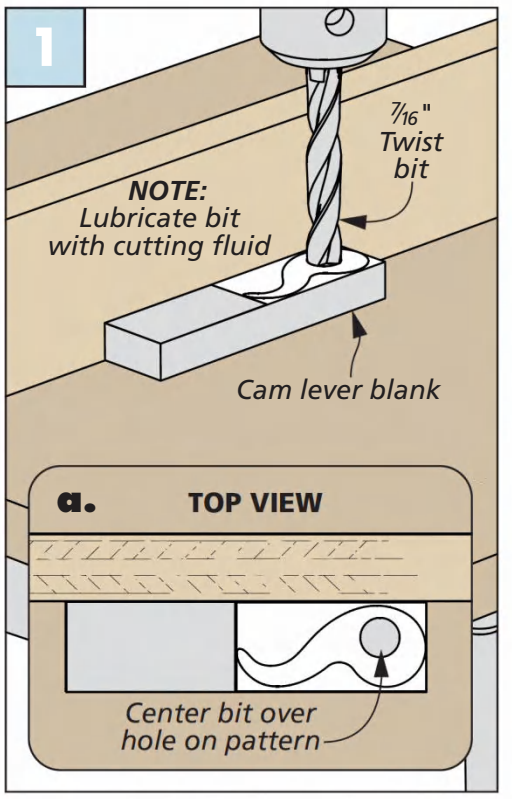

Hole in One. Apply the pattern and drill the hole for the shop-made cross dowel.

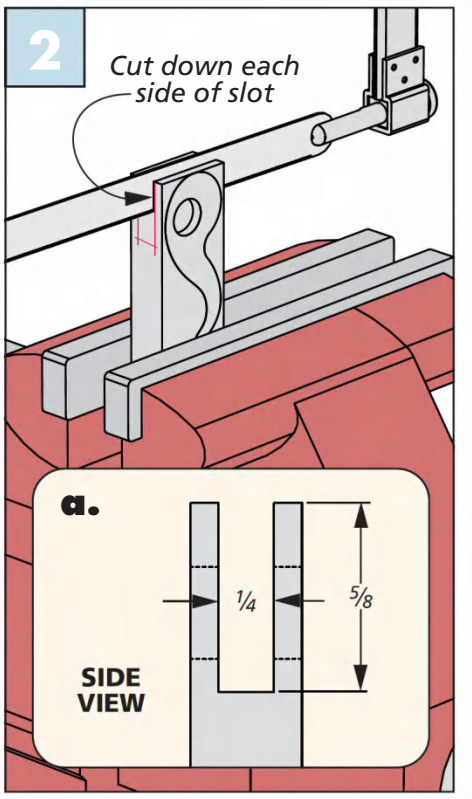

Slot. Make angled cuts to clear out most of the waste in the slot. Then file the end square.

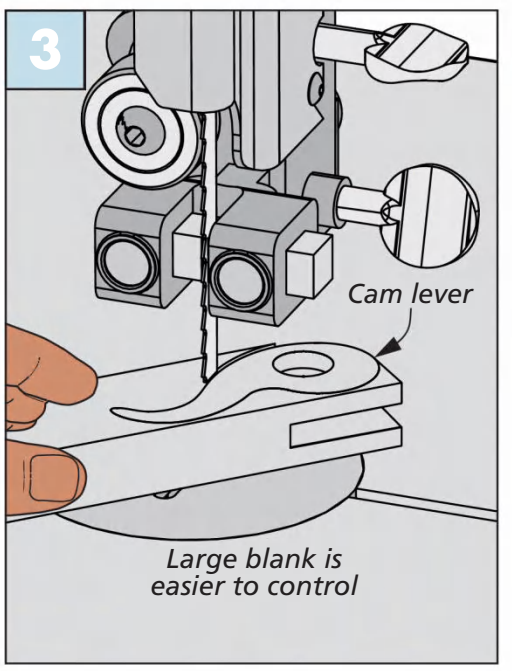

Saw to Shape. A narrow blade allows you to stay close to the lines on the pattern.

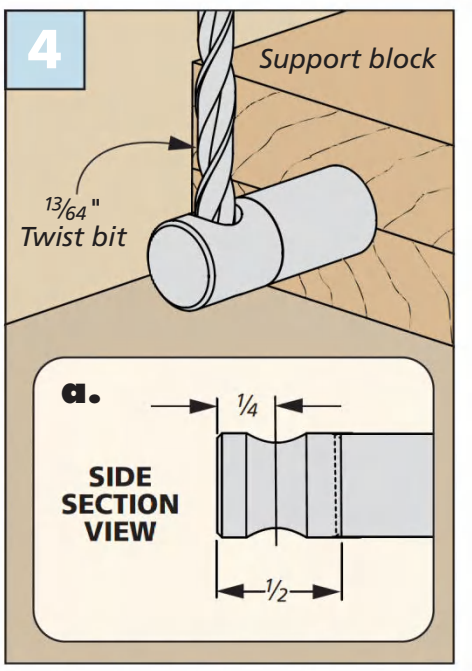

Pilot Hole. A support block prevents dowel from moving as you drill the pilot hole.

GO 2 Online Extras

For full-sized patterns of all parts, go to:

Woodsmith.com/262

Materials & Supplies

A	Frame Veneers (3)	1/16 x 6 1/8 - 9 5/8
B	Sides (4)	1/4 x 9/16 - 2 1/16
C	Fillers (2)	1/4 x 3/8 - 9/16
D	Handle (1)	1 1/4 x 1 1/4 - 4 1/4

- (1) 12" x 24" - 1/32" Aluminum Sheet
- (2) 1/4"-20 x 6" Aluminum Connecting Rods
- (1) 1 1/2" x 6" - 1/2" Aluminum Bar
- (1) 7/16"-dia. x 6" Aluminum Rod
- (2) 1/4" ID x 5/8"OD Delrin Washers

Written by: Rob Petrie; Project Design: Dillon Baker

▲ The hutch offers a plethora of storage both above and below. Old-fashioned battens back the doors on the upper and lower cases to keep them straight and flat throughout their lives.

▲ The textured faces of the drawer and doors offer a unique aesthetic for the hutch, accenting its clean lines and sturdy build with some rustic, rough-and-tumble attitude.

Illustrations: Dirk Ver Steeg

Rustic Hutch

Take a trip back in time to work on this classic furniture piece, using simple skills to make a fantastic project.

The hutch as we know it today has its roots in the homes of early American settlers. It was furniture born of necessity, capable of serving multiple functions in a small home and built with rudimentary techniques. A hutch could be built by the average person, who might not be a consummate craftsman and has only a relatively small selection of hand tools. The form can vary widely, from hutch tables to more modern china hutches and dressers (like the one you see here). Despite this, the broad concept of the hutch is unified by two principles: prioritizing function over form and using simple yet effective joinery.

While fanciful hutches aren't hard to find these days, our designer, Dillon Baker, chose to take a more traditional approach. With this project, much of the usual ornamentation has been stripped away, allowing Dillon and Marc, our shop craftsman, to focus on the color and texturing first.

Just as early settlers would select something local and inexpensive, we decided to use yellow pine, which was used predominantly in early hutches across the southeastern United States. A beadboard backing draws the eye upward, toward the arched frame of the upper case, to the molding across the top. This hutch will help you "flex" your fundamentals to create a project that, while simple, is far from elementary.

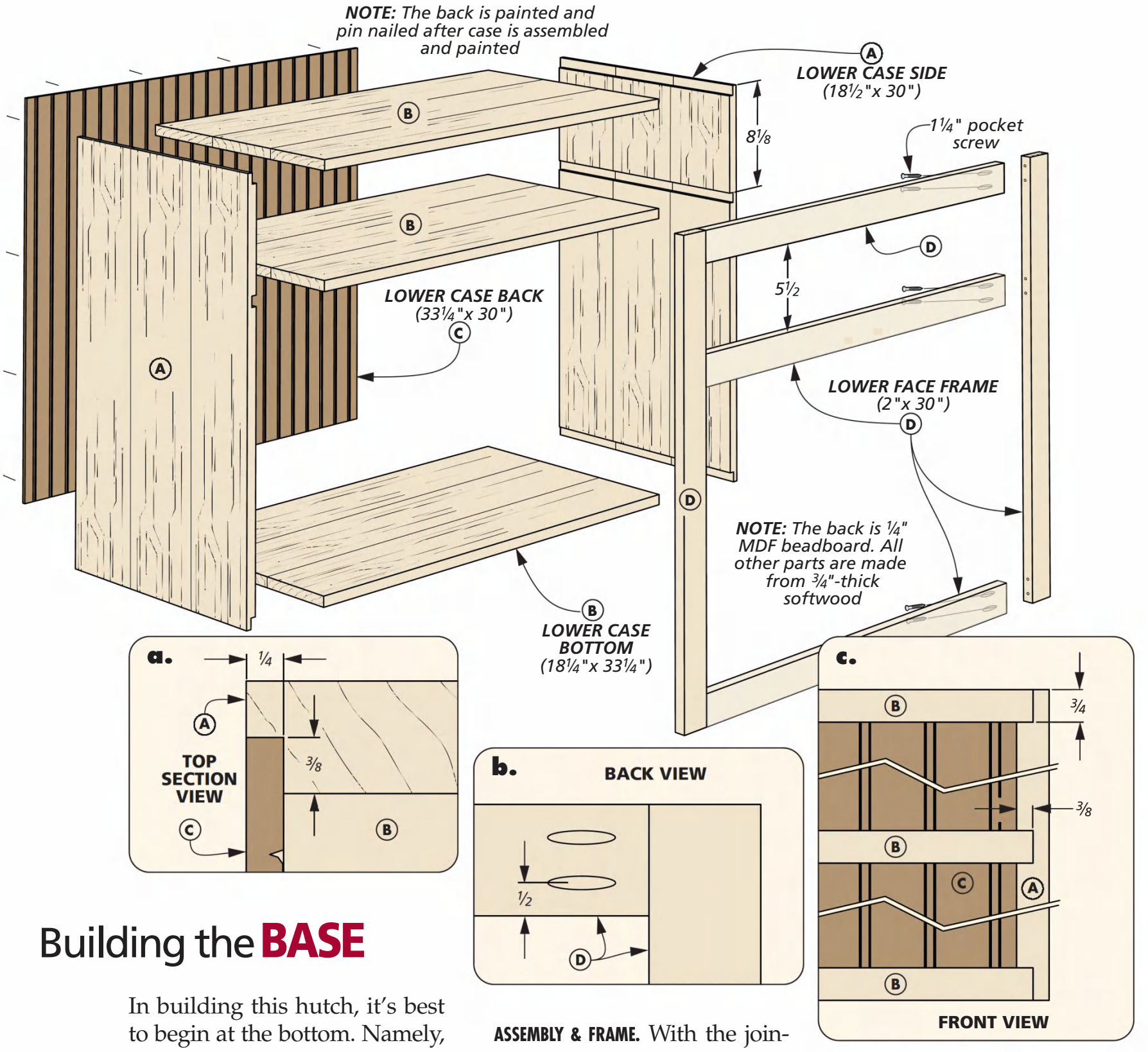

Building the **BASE**

In building this hutch, it's best to begin at the bottom. Namely, the lower case. As you can see above, it's basic in design. The sides have rabbets and dadoes to accept the top, bottom, and middle divider. The beadboard backing and front face frame spruce up this simple case.

Start by gluing up the panels for the sides, top, bottom, and divider. Once cut to size, take them over to the table saw and get out your dado blade.

RABBETS & DADOES. Rabbets and dadoes need to be made in the side pieces (as in details 'a' and 'c') to accept the horizontal pieces and the beadboard back. To limit tearout, make the dado cuts for the dividers, then cut the rabbet for the back.

ASSEMBLY & FRAME. With the joinery cut, the case can be glued up. While you're waiting for the glue to dry, cut the beadboard and frame pieces to size. After the glue has dried, pin nail on the beadboard backing.

As you can see in detail 'b' above, the face frame is held together by pocket screws. After drilling the pilot holes, run two pocket screws through either side of the three rails, connecting them to the stiles. Once the frame has been made, attach it to the case with glue and pin nails.

LOWER SHELF

Both shelves in this hutch are held by supports, which fit in brackets pin nailed to the case. After gluing up the lower shelf, cut the other shelf pieces to size. Keep the four lower shelf brackets as two extra-wide blanks for now. Leave an extra kerf's worth of width so they can be ripped to size after holes have been drilled for the notches (detail 'd').

SHELF. The shelf bridges across the supports on either side of the case. To fit over the brackets holding the supports, the shelf needs to be notched in each corner. After cutting the shelf to size, cut out these notches. I did this on the band saw, using the fence to keep the cuts straight and sanding away the blade marks afterward.

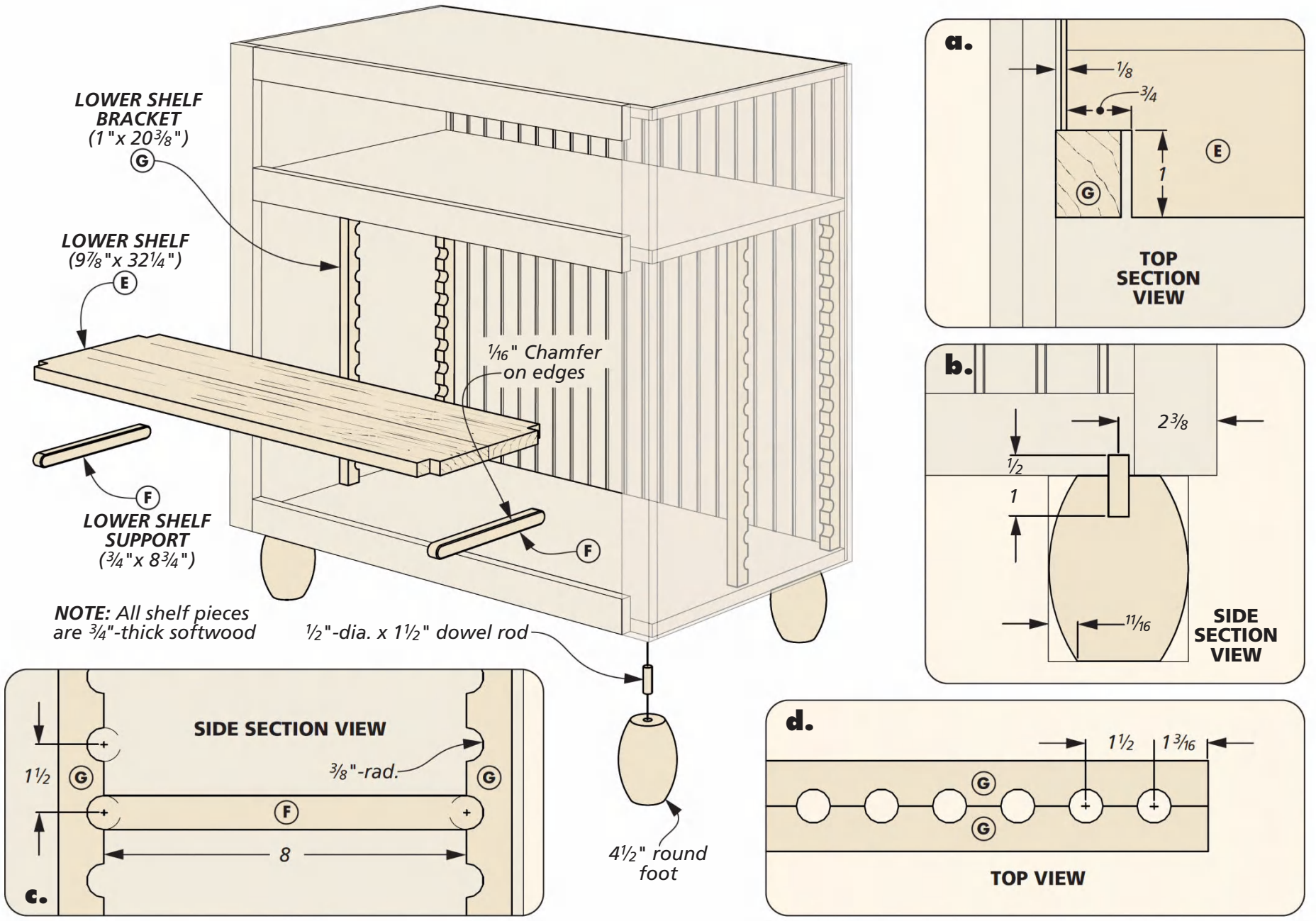

SUPPORTS. The shelf supports need to be shaped to fit in the round notches of the brackets. I did this by heading to the router table with a miter gauge. After putting in a roundover bit, I routed the corners on each end, rounding them out to slide into place to accept the shelf.

BRACKETS. Now return to the bracket blanks. Lay out the holes along the centerline of the wide blanks, spacing them as shown in details 'a' and 'd' on the above. Follow the steps shown in the "Shaping the Shelf Brackets" box.

INSTALLING THE SHELF. Lay out the location of the brackets in the case. Use glue and pin nails to secure the brackets in place. I kept a square nearby to ensure I was pinning them straight.

FEET. There's one thing left before moving onto the doors, and that's the feet. The feet we used here were store bought (source on page 66), but if you have a lathe handy, turning out these feet is a simple step.

With the feet in hand, it's time to put them on. Flip the case onto its top and lay out the positions of the feet as shown in detail 'b' above. After drilling out the holes in the case bottom, head over to the drill press and drill a hole in the center of each foot to match. Then use dowels and glue to attach them.

SHAPING THE SHELF BRACKETS

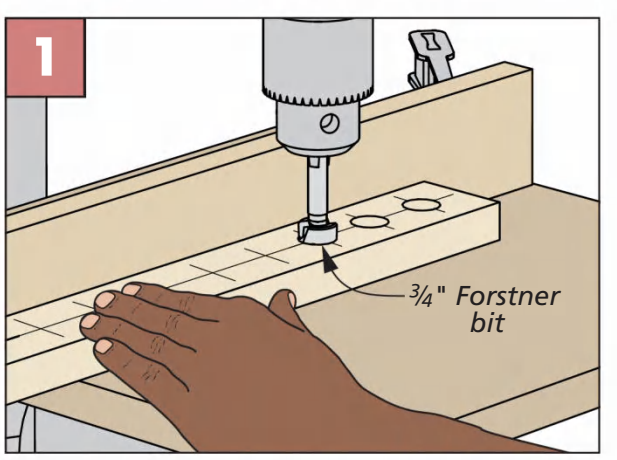

Drill. Before cutting the shelf supports to exact size, use a Forstner bit on the drill press to bore out a series of holes.

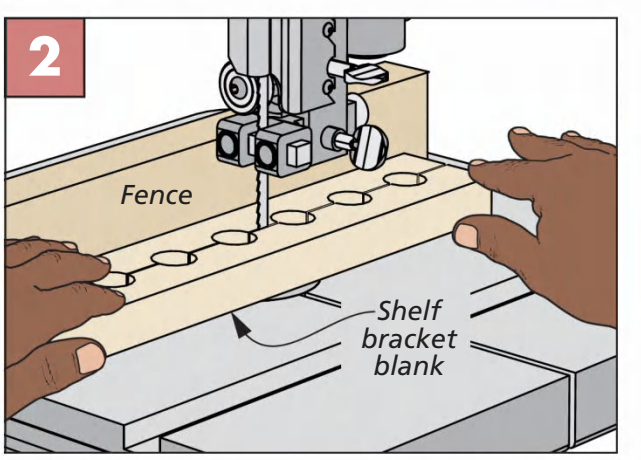

Split. With the holes in place, take the shelf supports over to the band saw and rip them down to final size.

NOTE: The doors and battens are ¾"-thick softwood. The latches are ½"-thick softwood

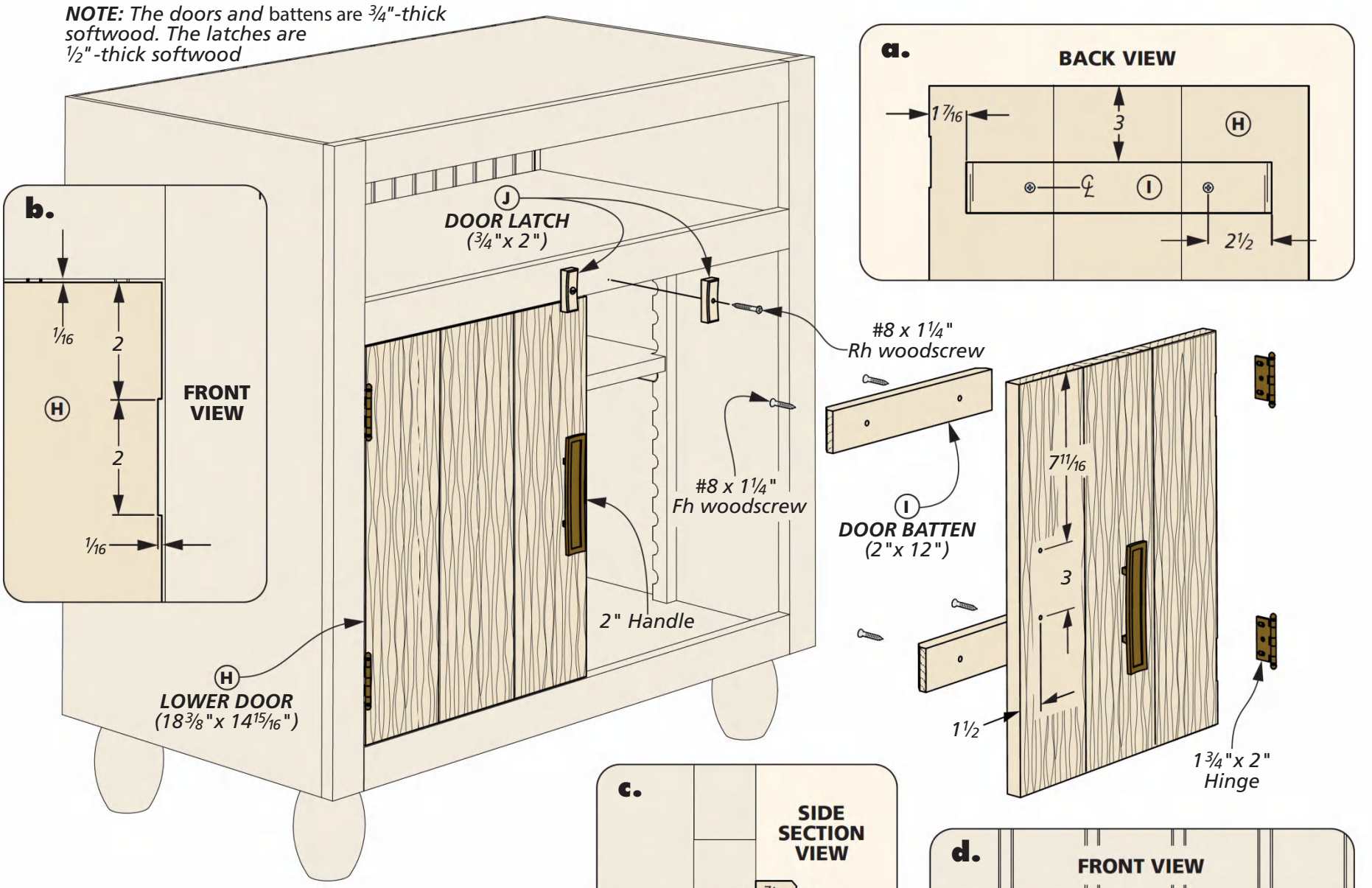

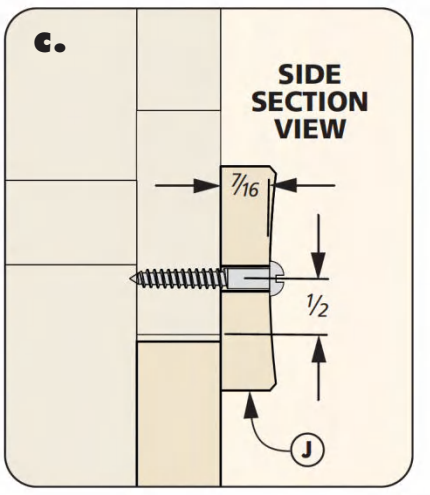

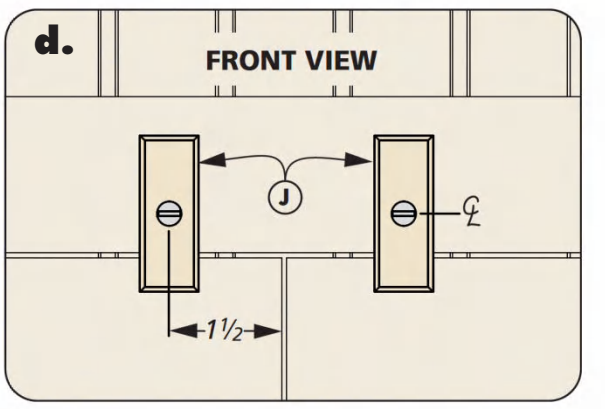

Closing up the **CASE**

Next on the list for our hutch are a pair of batten doors. Battens were once used to join multiple pieces into one door without glue, but on modern solid-panels doors they also serve to keep the piece from cupping.

DOORS. Begin by gluing up the doors. Aim for a 1/16" gap around both doors. Once dry, lay out the hinge mortises on each door (as shown in detail 'b' above) and head to the table saw. Use a dado stack and a miter gauge to make the cut.

There are eight battens in total, and I cut them all to size now. To chamfer their back edges (shown in the main drawing), take a trip to the router table. Lay out their location on the back of the doors (detail 'a'), as well as the screws for both. When drilling pilot holes, oversize them to give room for seasonal movement. Then, screw them in.

GO 2 Online Extras

For more on making the decorative door and drawer front texture, go to:

Woodsmith.com/262

LATCHES. The last pieces relating to our doors are the latches. Detail 'c' shows their profile. I roughly marked the shape and sanded it down on the spindle sander. I cut four so I'd have the two for the upper doors as well.

Mark the latch locations on the case as shown in details 'c' and 'd' above. Use the drill press to make pilot holes in the latches, then crew them in place, but keep them a tad loose.

The doors will be attached by hinges, and handles will be screwed on the front, but leave those unattached for now. The doors, along with the drawer front, will be textured after the hutch has been painted, but we'll get more into that at the end.

DRAWER

The drawer (illustrated on the next page) is another example of basic yet effective joinery. The front is held on by half-blind dovetails, the back fits the sides with a rabbet, and the bottom slides into grooves.

JOINERY. Start with the sides, laying out the tails (as in detail 'b') using a 14° angle. Follow the box on the next page to cut the dovetails by hand.

Once the hardest part is out of the way, there's some simpler joinery left to take care of. Head to the table saw to cut the groove in the front and sides to accept the plywood bottom. Rabbet the back ends of the sides to fit the drawer back and glue up the

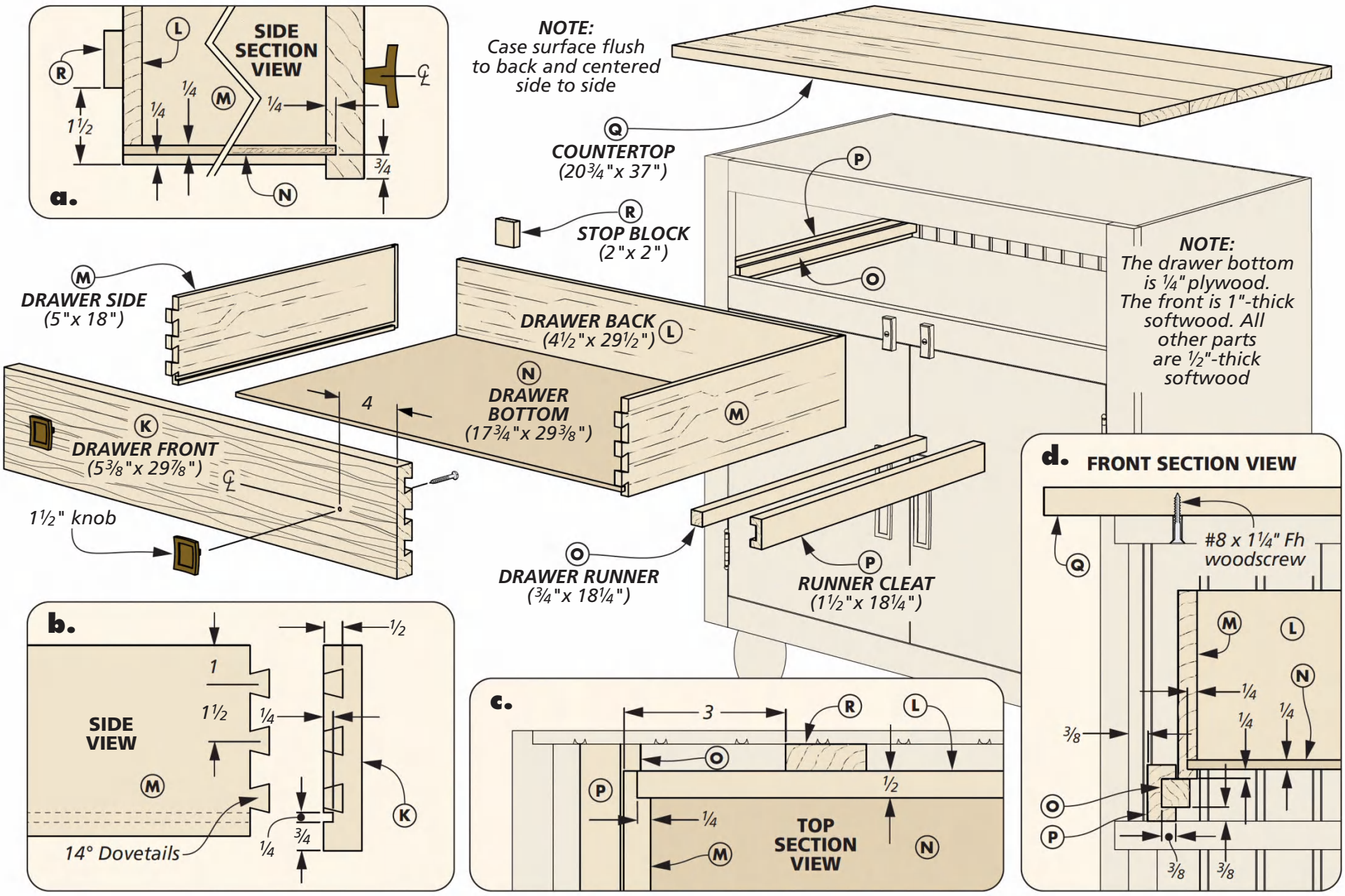

drawer. Attach the stop blocks to the back of the drawer too. Glue them on and use pin nails to hold them in place while they dry.

As with the doors, the drawer front is textured as well. Leave the knobs off until the hutch is painted and textured.

DRAWER RUNNERS. The drawer rides on two simple softwood runner assemblies. These assemblies are made of a runner and cleat. The cleat is glued into a groove in the runner, then both are glued in the case (as shown in detail 'd').

COUNTERTOP. The countertop serves as a second top to the lower case as well as a general use surface. Once the panel is glued up, clamp it onto the lower case, then drive screws up from underneath to seat it properly, as in detail 'd' above.

DOVETAILING BY HAND

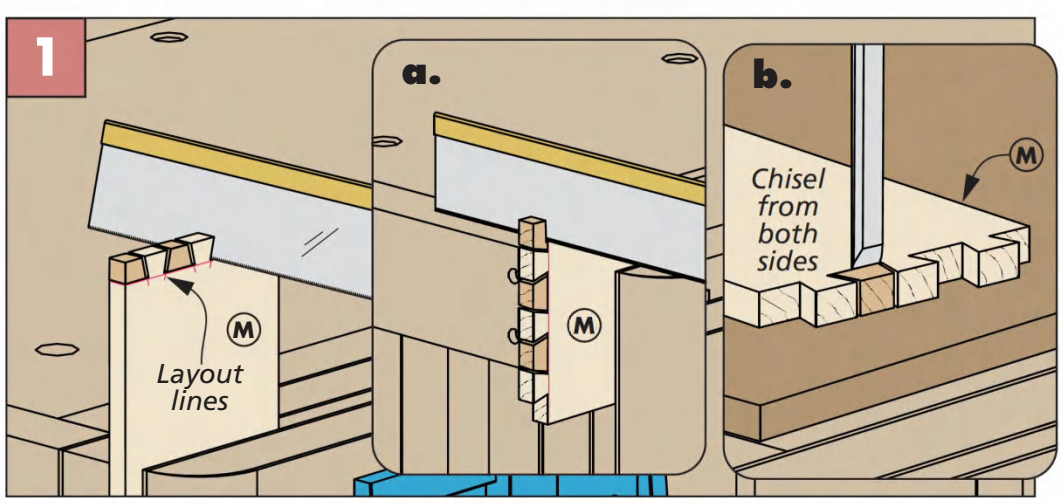

Tails First. After laying the tails out, cut down to the baseline on each tail using a hand saw. Use a saw and a chisel to remove the waste.

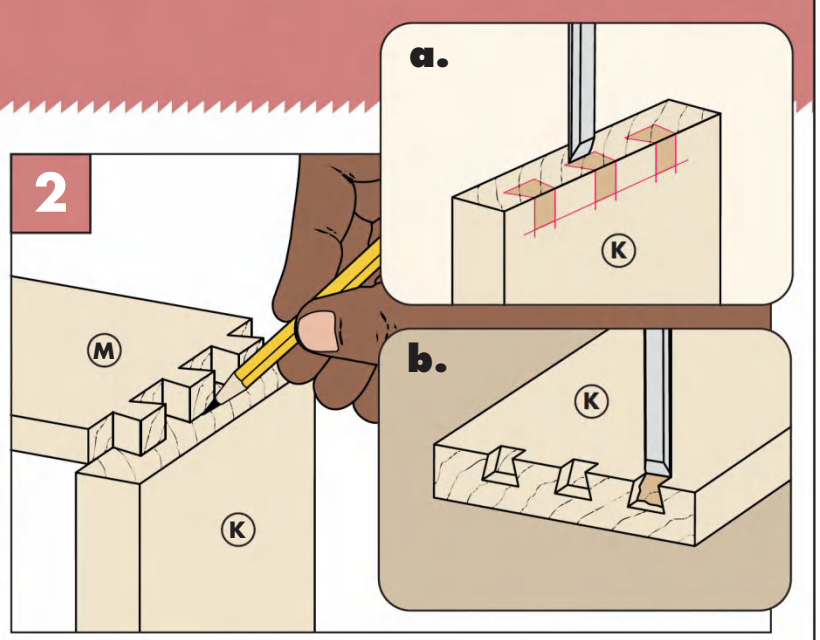

Trace the Pins. Lay out the pins using the tails as a template, then remove the waste with a chisel.

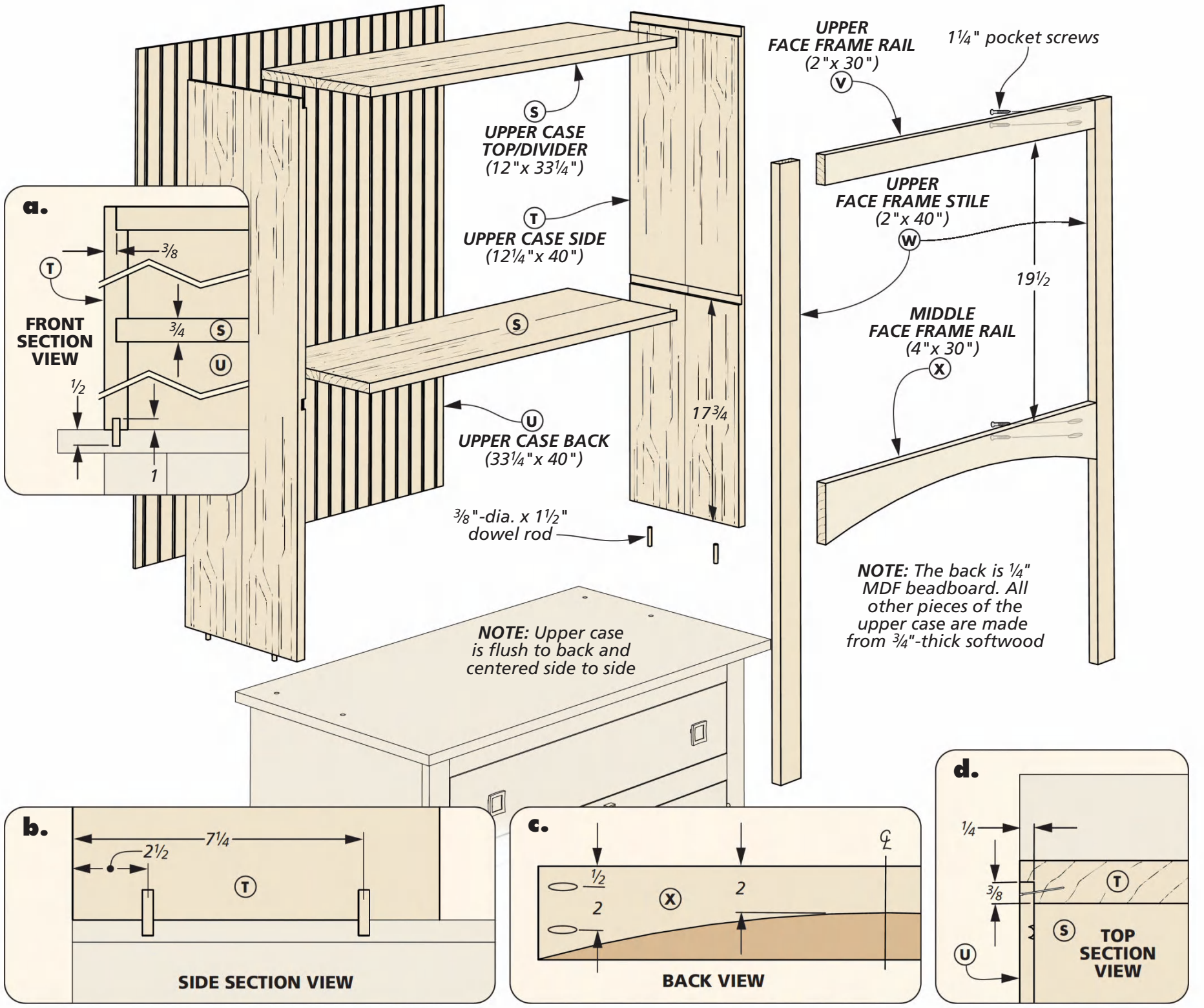

Topping off the **HUTCH**

The upper case of the hutch is a little simpler than its counterpart below. There is no drawer or bottom, as it fits directly onto the countertop, held in place by dowels. These dowels allow the upper case to be taken off if the hutch needs to be moved.

JOINERY. With the pieces ready, it's time to get to work on some joinery. Again, I rabbeted the top of the case sides and cut the dadoes to accept the horizontal pieces first. Then I rabbeted the back of both the sides, making room for the beadboard back panel to be pinned on.

DOWELS & GLUEUP. To fit the dowels in the bottom of the case sides, drill out holes for them as shown in details 'a' and 'b' above. All that's left for the case at this point is the glueup. When the glue dries and the clamps come off, finish it up by pinning on the beadboard back.

FRAMING. The framing on the top of the hutch is much the same as the bottom. The only difference to pay particular attention to here is the arch on the middle face frame rail.

To scribe this arc, start by marking either end, as well as its apex at the center. Put clamps at at the base of the arc on both sides and get a yardstick (or a thin strip of wood). Use the clamps as resistance while you flex the middle of the yardstick toward the arc's apex, then scribe along the yardstick. Now cut it on the band saw.

With the pieces cut to size, they can now be pocket screwed together, then the frame can be glued and pin nailed to the case.

MOUNTING. There's one thing left to do on the body of the case before proceeding to the shelf: mounting it on the lower case.

Insert the dowels into the upper case sides and sit it on top of the lower case, as shown in the box to the right.

After the upper case has been situated, scribe the location of the dowels on to the countertop. Remove the upper case and drill out the holes for the dowels. Don't use any glue when attaching the upper and lower case together — the dowels and gravity together are enough to hold it in place.

MOUNTING THE UPPER CASE

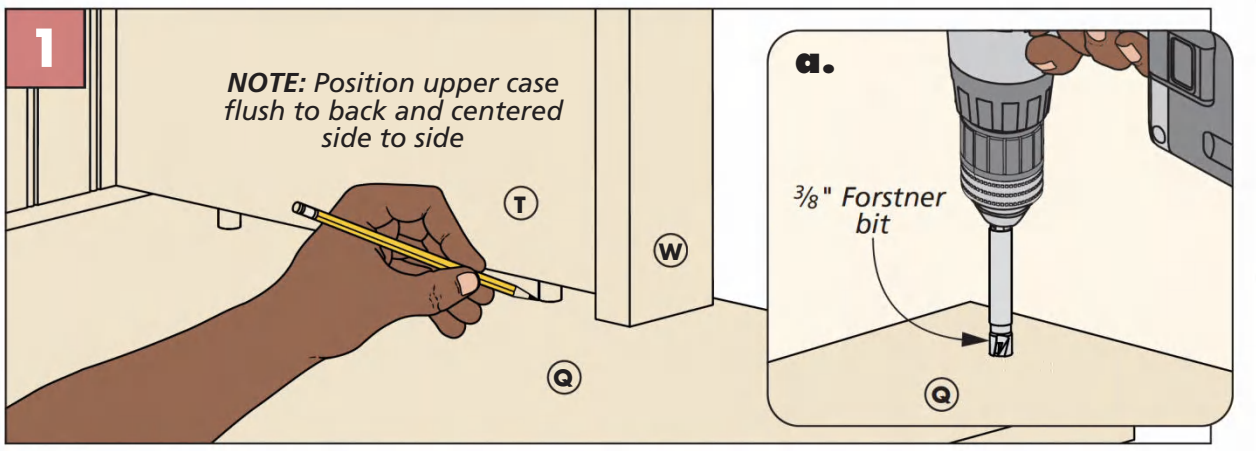

Scribe & Drill. To ensure the upper case is aligned, scribe the dowel locations directly onto the case surface, then drill them out with a Forstner bit.

UPPER SHELF

The upper case is done, and it's time to fill it in. The shelf above is slightly larger than the lower case shelf, but other than that you'll find it's the same process.

When cutting the pieces to size again, keep the brackets as two extra-wide pieces and follow the steps on page 43. Head back to the drill press and use that same Forstner bit to bore out the holes that will hold the supports. Use a band saw (along with the fence to keep you straight on course) to rip these two blanks into your four brackets.

Going back to the supports, round over the ends as you did before, allowing them to sit between the brackets while they hold the shelf. As for the shelf, notch out its corners to accomodate the brackets. All the shelf assembly parts have been made, so it's time to install them.

Mark the bracket placement in the upper case, then glue and pin nail them in. Now get ready for the last leg of the journey, in which we'll be putting on another set of doors, as well as molding, edging, and texturing.

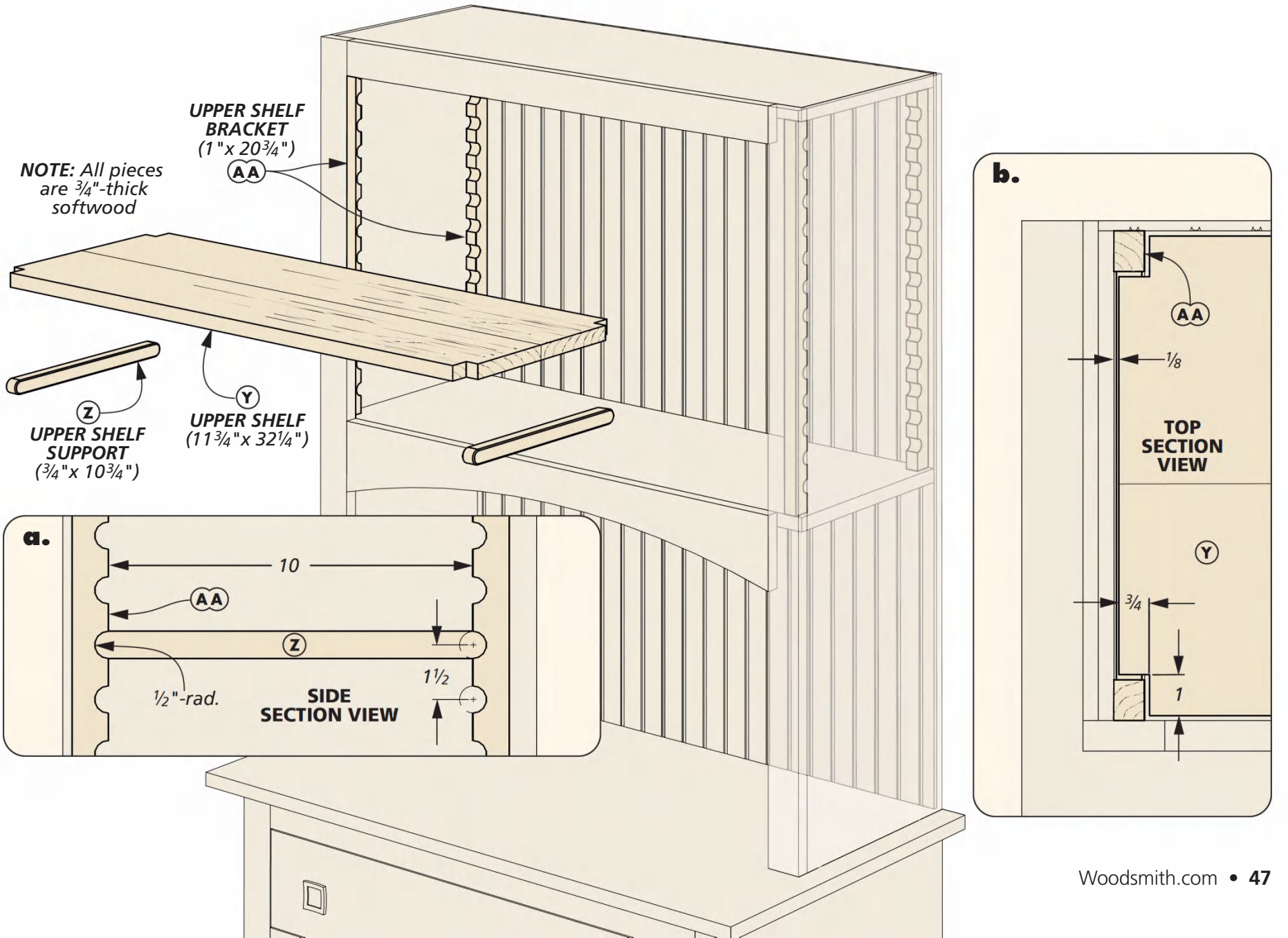

Another Set of **DOORS**

As with the lower case, a pair of board-and-batten doors close off the upper portion of the hutch. You'll find the doors are slightly longer, but otherwise the same as the lower doors. Once they're glued up and cut to size, the only thing that needs to be done is to cut the mortises for the hinges.

If you didn't cut all the latches and battens earlier, do so now. Cut them to size, chamfer the back edges of the battens, and shape the latches. The battens can be screwed to the doors using oversized pilot holes.

For the latches, follow the same steps as before to attach them. Mark their location on the hutch, drill out the pilot holes, and screw them in lightly.

Last come the handles and hinges. I recommend predrilling the holes for the hardware, but setting the door aside until after texturing and painting.

CROWNING THE HUTCH

The hutch is almost done. Both cases are built, the doors and drawer are complete, and the only thing left before painting is the molding and edging. Take a look on the next page to see how these pieces fit together.

MOLDING. I began with the molding. The three pieces are rabbeted along the back edge to fit over the top of the hutch, then mitered to fit together. I started with the rabbets, as that would determine the length I'd need to miter these to. Once that was done, I tested how they fit on the case to determine where to cut the miters.

To attach the molding, I used glue and pin nails. After applying glue to the rabbets, I seated them on top of the hutch and pin nailed them in place to dry.

EDGING. The edging is even simpler than the molding, as it's simply screwed on top. Once cut to size, miter the corresponding ends as shown on the next page. Use some clamps to keep the edging in place while you drill the pilot holes and sink in the screws.

PAINT & TEXTURE. At this point, all parts of the hutch are built, but it's still missing a finish. Our designer chose to create the textures you see on pages 40 and 41, inspired by textures created from crude tool work.

He chose to focus on the doors as well as the drawer front, making the texture an accent to the piece rather than the highlight of it. The texturing was accomplished by furrowing the face of the doors and the drawer front with an angle grinder, aiming for an organic pattern. Then the whole project was painted. As more layers of paint were

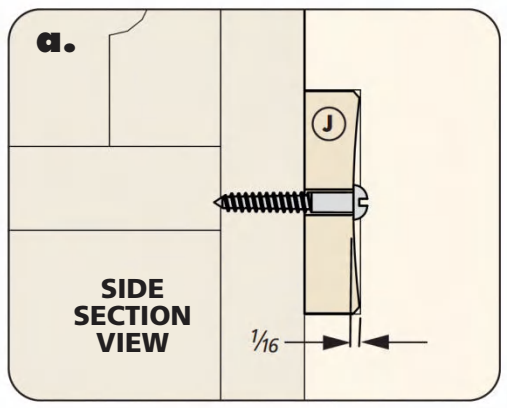

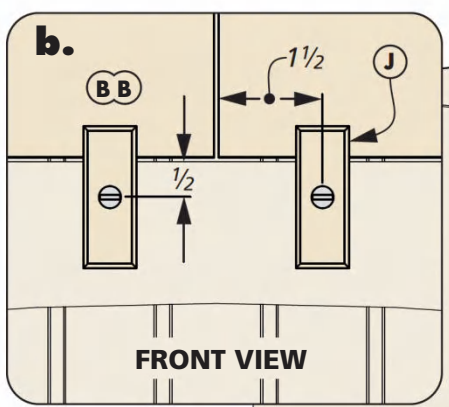

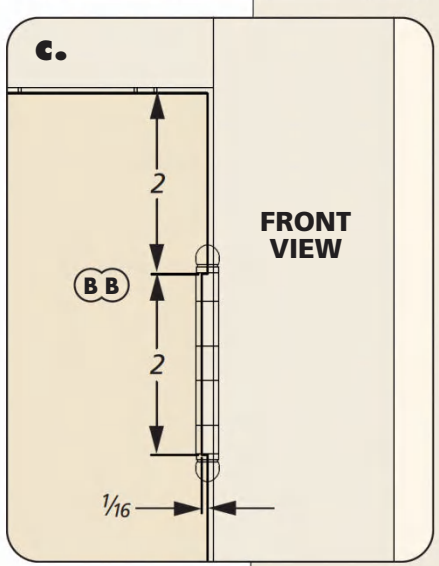

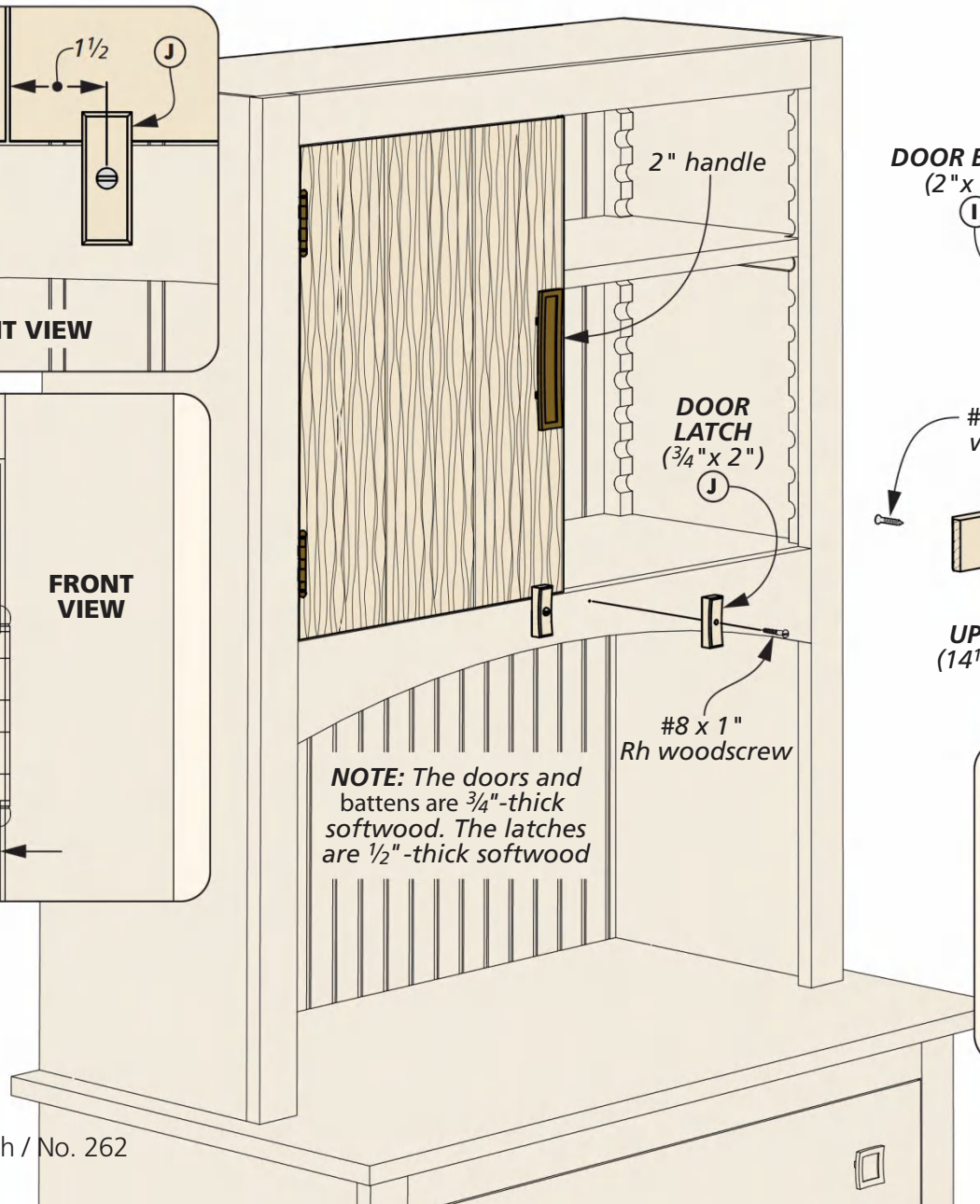

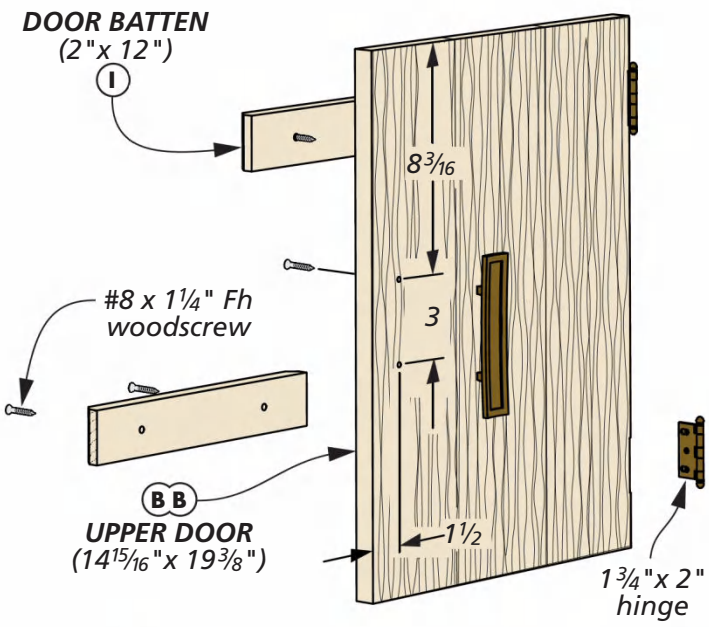

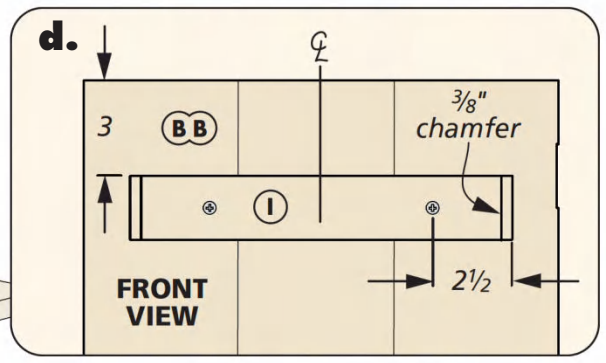

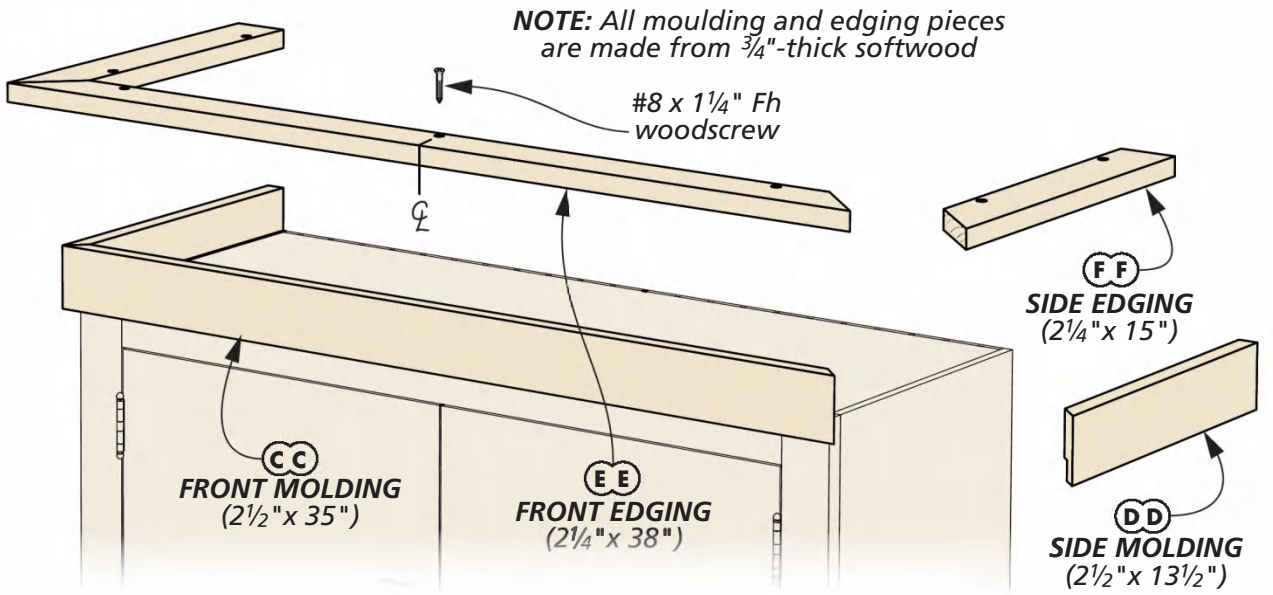

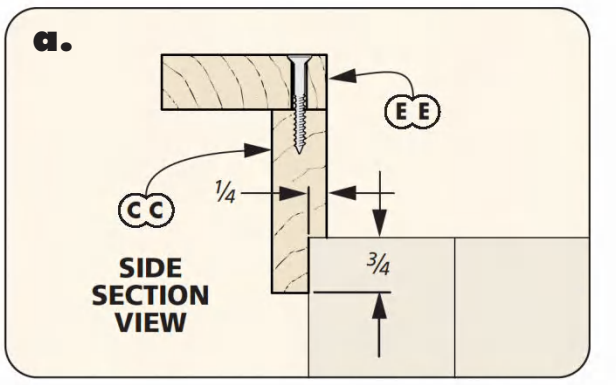

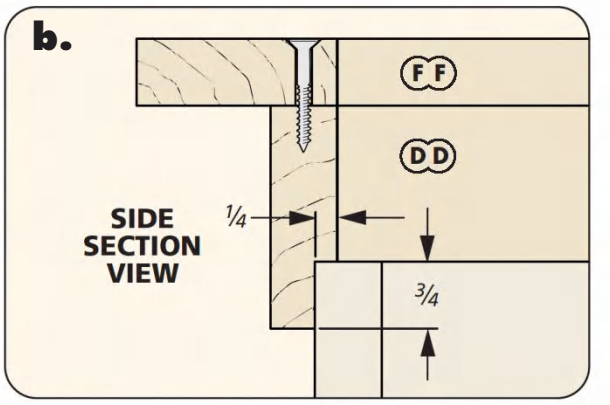

applied, the textured faces were sanded back to reveal bits of bare wood beneath. You can find more on this process at *woodsmiths.com/262*, and you can find the source for our paints on page 66.

Textured or untextured, this hutch shows off the effectiveness of simple techniques. Whether practiced today or centuries ago, these quality practices will always have a place in the shop. W

Materials, Supplies & Cutting Diagram

A	Lower Case Sides (2)	¾ x 18½ - 30
B	L.C. Top/Btm./Dvdr. (3)	¾ x 18¼ - 33¼
C	Lower Case Back (1)	¼-bdbd - 33¼ x 30
D	Lower Face Frames (5)	¾ x 2 - 30
E	Lower Shelf (1)	¾ - 9⅞ x 32¼
F	Lower Shelf Supports (2)	¾ x ¾ - 8¾
G	Lower Shelf Brackets (4)	¾ x 1 - 20⅜
H	Lower Doors (2)	¾ x 14 15/16 - 18⅜
I	Door Battens (8)	¾ x 2 - 12
J	Door Latches (4)	½ x ¾ - 2
K	Drawer Front (1)	1 x 5⅜ - 29⅞
L	Drawer Back (1)	½ x 4½ - 29½
M	Drawer Sides (2)	½ x 5 - 18
N	Drawer Bottom (1)	¼ ply - 17¾ x 29⅜
O	Drawer Runners (2)	¾ x ¾ - 18¼
P	Drawer Runner Cleats (2)	¾ x 1½ - 18¼
Q	Countertop (1)	¾ x 20¾ - 37
R	Stop Blocks (2)	½ x 2 - 2
S	U.C. Top/Divider (2)	¾ x 12 - 33¼
T	Upper Case Sides (2)	¾ x 12¼ - 40
U	Upper Case Back (1)	¼-bdbd - 33¼ x 40
V	Upper Face Frame Rail (1)	¾ x 2 - 30
W	Upper Face Frame Stiles (2)	¾ x 2 - 40
X	Middle Face Frame Rail (1)	¾ x 4 - 30
Y	Upper Shelf (1)	¾ - 11¾ x 32¼
Z	Upper Shelf Supports (2)	¾ x ¾ - 10¾
AA	Upper Shelf Brackets (4)	¾ x 1 - 20¾
BB	Upper Doors (2)	¾ x 14 15/16 - 19⅜
CC	Front Molding (1)	¾ x 2½ - 35
DD	Side Molding (2)	¾ x 2½ - 13½
EE	Front Edging (1)	¾ x 2¼ - 38
FF	Side Edging (2)	¾ x 2¼ - 15

- (4) ⅜"-dia. x 1½" Dowel Rod
- (4) ½"-dia. x 1½" Dowel Rod
- (15) #8 x 1¼" Fh Woodscrews
- (4) #8 x 1" Rh Woodscrews
- (20) 1¼" Pocket Screws
- (4) 3⅜"-dia. x 4½" Feet
- (4) 3" Primitive Handle
- (2) 1½" Primitive Knob
- (8) 1¾" x 2" Ball-tip Hinge

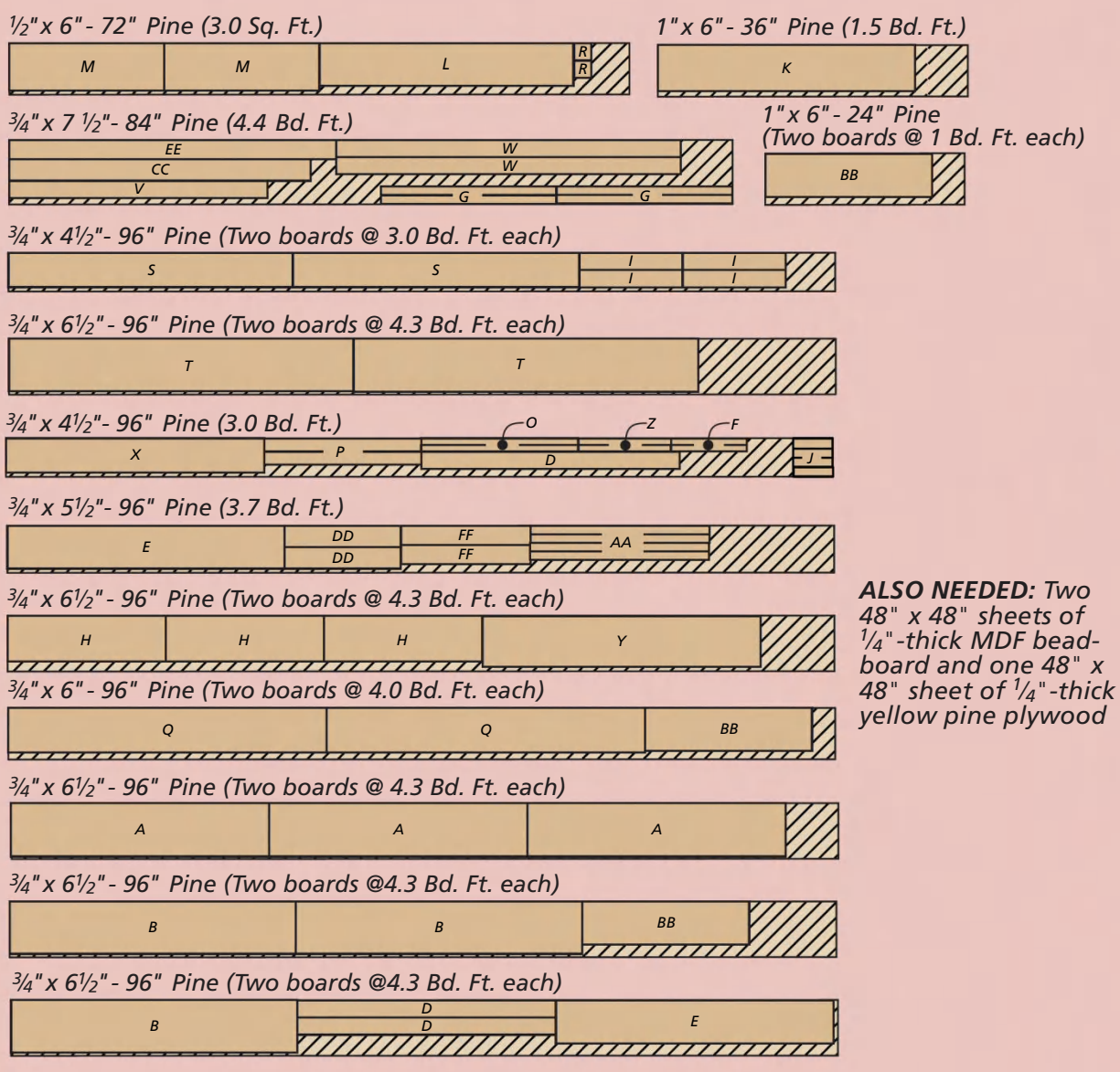

ALSO NEEDED: *Two 48" x 48" sheets of ¼"-thick MDF beadboard and one 48" x 48" sheet of ¼"-thick yellow pine plywood*

Intarsia Spice Cabinet

This handsome addition to your kitchen will win praise for looks and efficiency, as well as keep a good supply of your favorite spices close at hand.

The size of the storage tins for your favorite spices are a generous two ounces. Their clear covers give you plenty of warning when you're running low.

It's an age old problem — bottles of spices in varying sizes and shapes that often occupy a shoe box lid, (maybe two) on a low shelf in your kitchen cabinets. This is complemented by the body of the shoe box stuffed away on a higher shelf with larger bottles that are all too willing to tumble down on you when you pull the box down.

This captivating little cabinet is an attractive addition to any kitchen that will put an end to that nonsense. An oak case and door frame warms you to the geometric treat of the Baltic birch end grain plywood pattern of the door panel. A decorative pattern known as *intarsia*.

INTARSIA PATTERN. This version of intarsia reminds you of its close cousin, parquet — the patterns you see in floors that are made out of segments of wood. It might seem like a lot of work, but we've wrestled the process down to a system that makes the task more like a puzzle.

The panel stands out from the door frame by the shadow line that's created by the gap between the two. Some over-wide splines and red paint are what pull this smooth look off.

Staying with the subtle theme, offset knife hinges maintain a low visual profile while making for a smooth-operating door. There's lots to do on this little project so you might as well get cracking.

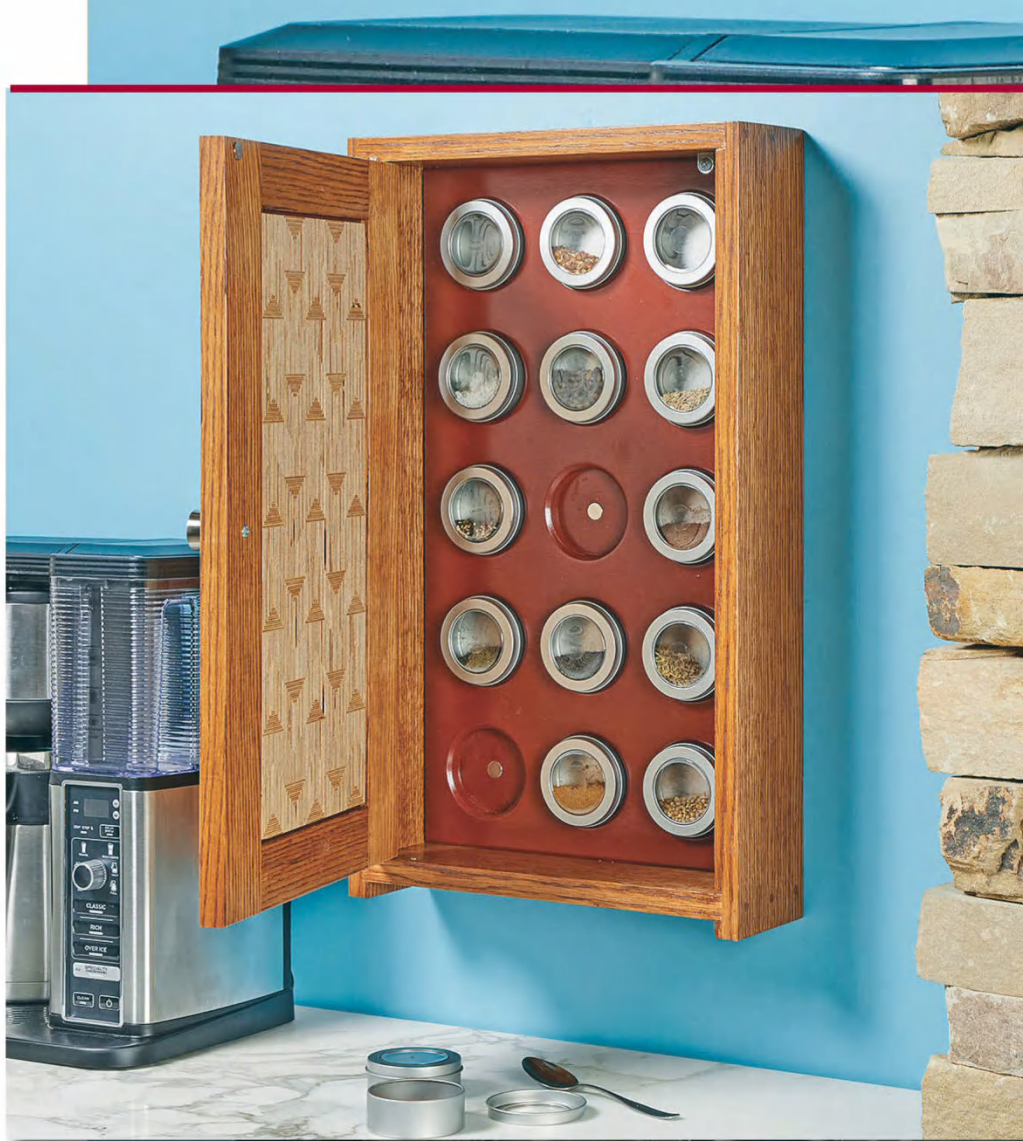

The cabinet is designed to hang on the wall to free up counter space. But it could easily sit on the counter as well. Options are good to have.

Written & Illustrated by: Erich Lage

Project Design: Dillon Baker

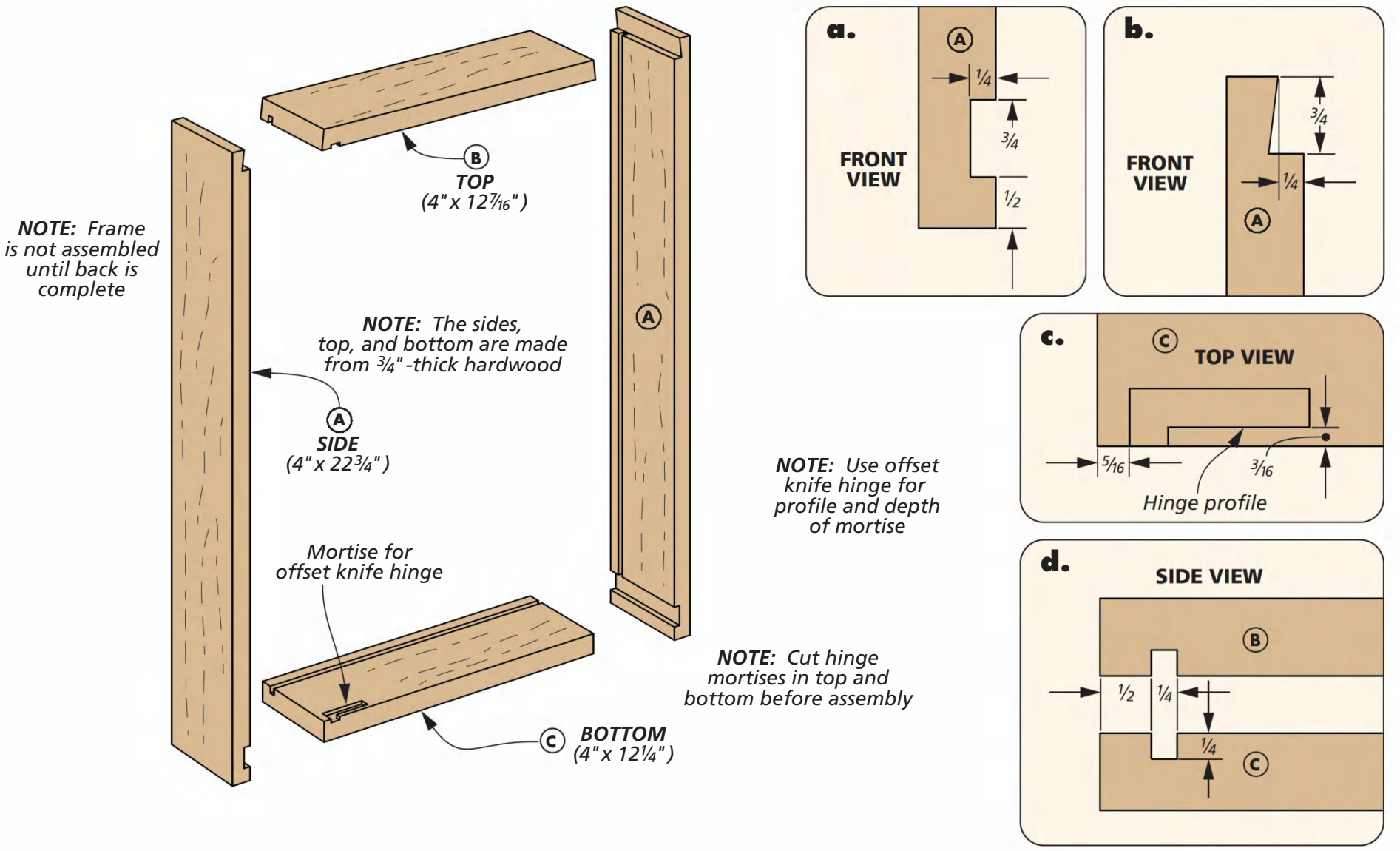

Start with the CASE FRAME & BACK

As you see in the drawings above there is nothing flimsy about the case of this cabinet. The top and bottom are trapped between the sides with sound joinery. The bottom is nestled in a dado, while the top is joined to the sides with a little more visual sass — a dovetail rabbet. Then to add a little more to the looks, each joint has three dowels spaced across the joint and glued in place (that's done after the case is assembled).

All four case parts have a groove on the rear edge for the thick case back that houses the spice tins (more on that in a little bit). Lets get working on these parts, starting with the sides.

CASE SIDES. Detail 'a' shows the dado you need to cut towards the bottom end of the sides — that's table saw work in my book. Then you can sashay to the router table to finish the rest of the joinery work.

MAKING DOVETAIL RABBETS

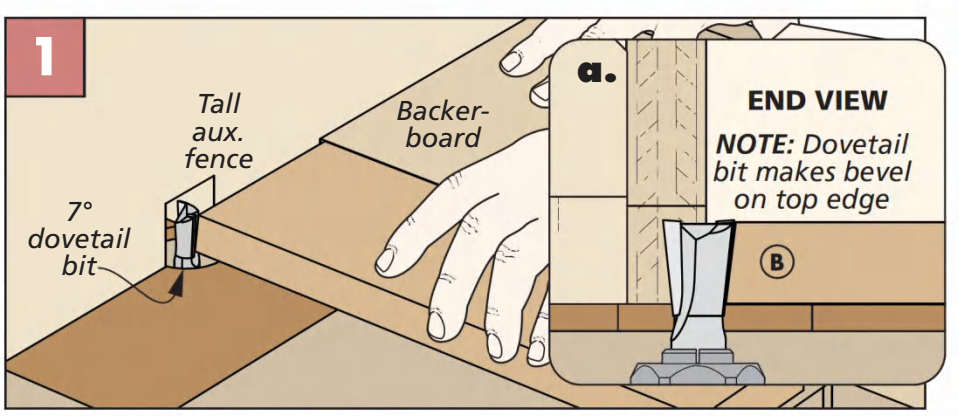

Bevel Top. A dovetail bit in the router table makes short work of beveling the ends of the top. A backerboard is needed to ensure you don't chip out the back edge of the top.

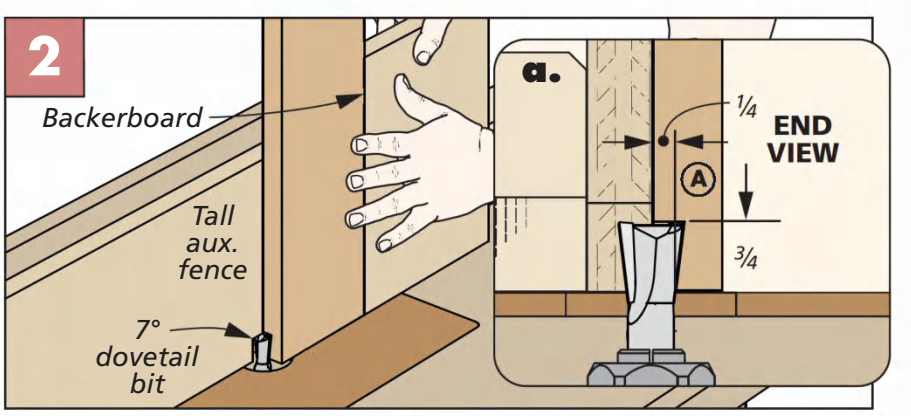

Rabbet Sides. The dovetail rabbet at the top of the sides is made with the same setup. But the sides are stood on end and supported with a backerboard as well.

The box at the bottom of the previous page shows the task of making the dovetail rabbets. Backerboards are your best friends here. You could do the bevels on the ends of the top (Figure 1a) at the table saw. But I chose to do the job at the router table to guarantee a uniform fit. Figure 2 shows how to cut the dovetail rabbet in the side.

Making the groove for the back in these parts is a simpler affair. The top and bottom have through grooves (detail 'd' on previous page). The grooves in the sides stop in the dado you made earlier. So I listened for the audible clue of the bit entering the dado on the right side, and as a drop point for the groove in the left side.

HINGE MORTISES. Detail 'c' on the previous page shows the location of the mortises in the top and bottom for the offset hinges. There's an article on page 60 that walks you through making these mortises for offset knife hinges. Next up is the back.

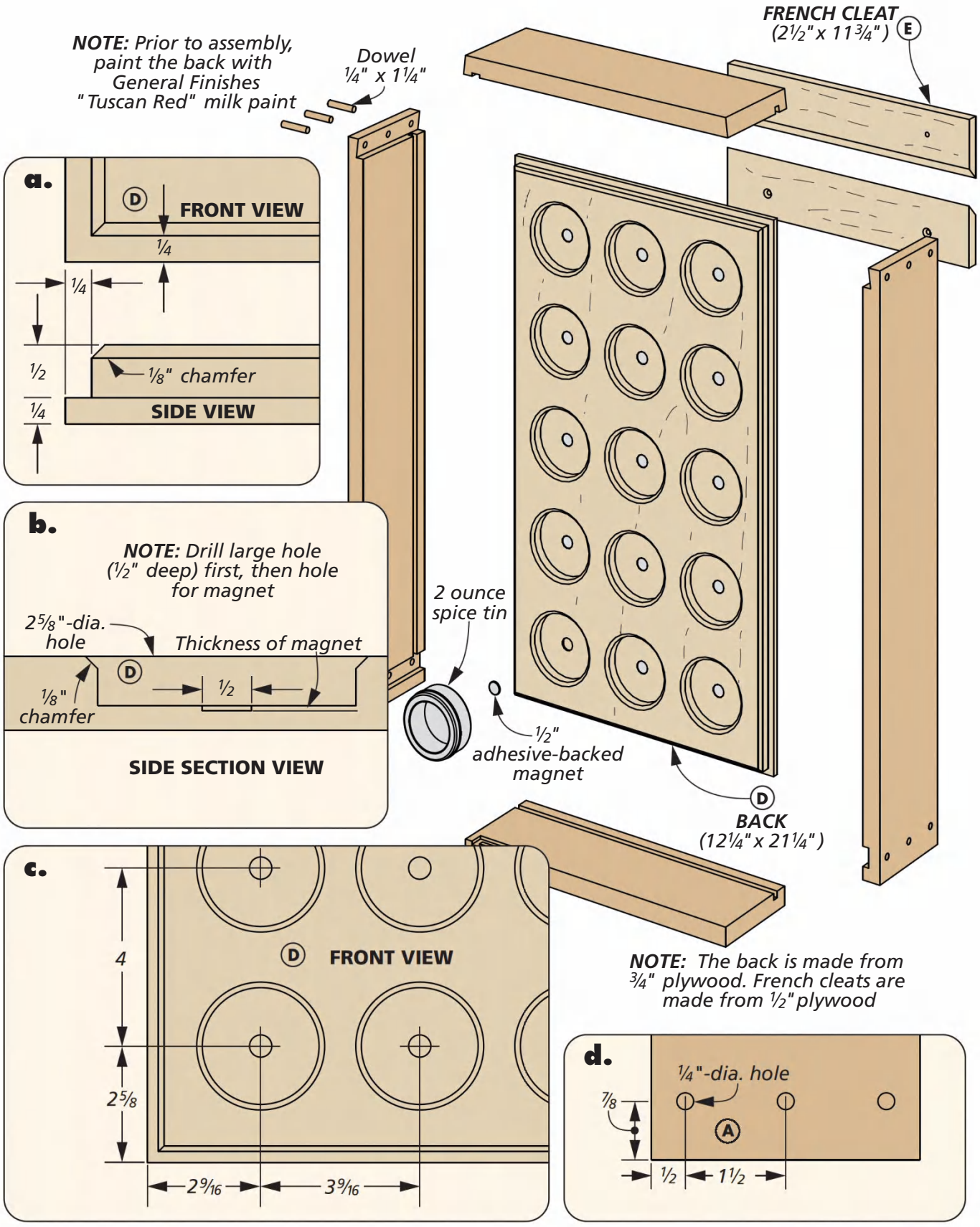

THE BACK

As you can see in the drawings above, the back is a lot more than a piece of plywood that encloses the rear of the case. It organizes and displays all the spices you have available for the culinary task at hand. We chose 15 two ounce tins for this project. It all starts with a piece of ¾" Baltic birch plywood.

RABBETS FIRST. Detail 'a' above shows the rabbet that's cut around the edge of the back at the table saw. The tongue formed by the rabbet resides in the grooves you made earlier in the case frame parts. The next step is to lay out the centers for all the tins (detail 'c'), using an awl to dimple the center of each hole. Now you're ready to do some work at the drill press.

Two Forstner bits come into play when making the holes for the tins. (If you have a 2⅝" Forstner bit you can shorten this work path. The biggest I have is 2" so the following was my plan of attack.) First, drill the large hole to clear away most of the waste.

To clean up the opening, I made a template of the final hole size and used a dado clean-out bit in my plunge router. To finish the surface of the back, I softened the edges of all the holes and the rabbeted edge of the back with a chamfer bit. Then, back at the drill press you can drill out the center hole to accommodate the rare-earth magnet. These two steps are shown in detail 'b.' After a good sanding and a coat of red paint, the back is ready to be glued up with the case frame parts.

When you've packed away all the glue paraphernalia, you can drill the holes in the sides for the dowels (detail 'd') then cut them flush and sand them smooth to the surface. The main drawing and detail 'e' shows the French cleat that's glued to the back. Finishing that, it's time to make an intarsia panel for the door.

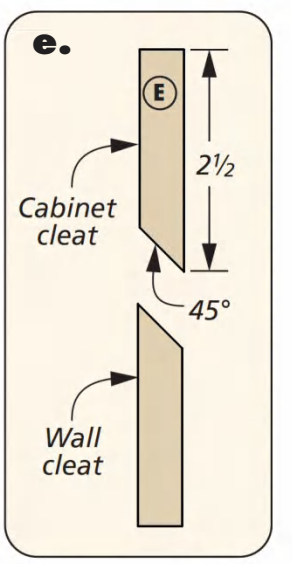

Adding one fine **DOOR**

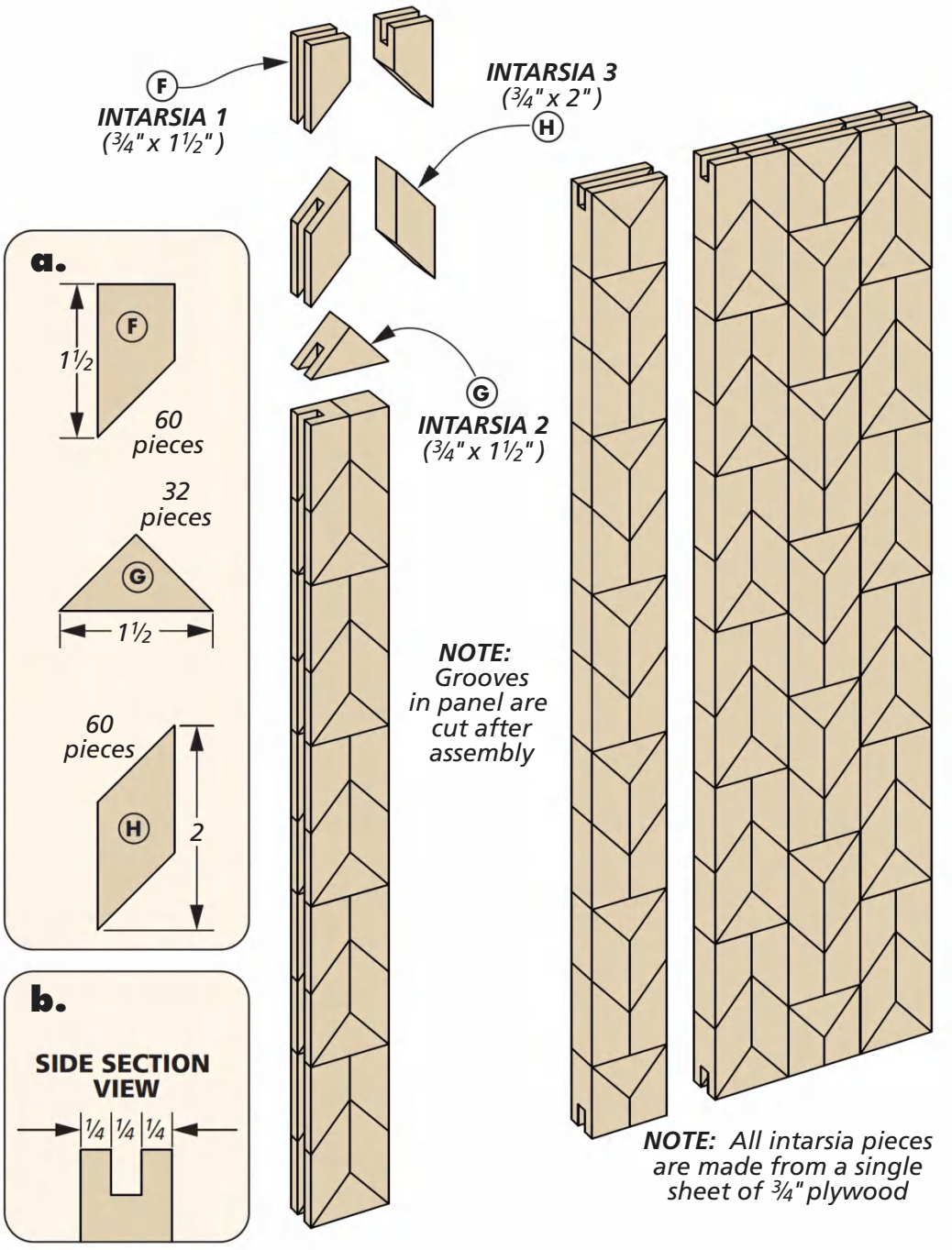

The beautiful intarsia panel you see in the drawings to the right is made from cross sections of Baltic birch plywood. If the thought of keeping track of all those pieces makes you pucker up a little — not to worry. We've got a method to this madness that will make the process fun. It all starts with three basic shapes.

THREE PIECE PUZZLE. Detail 'a' shows the three cross section profiles that you'll use to make the panel. You might be tempted to use up scraps of plywood leftover from past projects — don't. Your attempt at frugality could very easily be rewarded with frustration and pattern sections that don't line up. All due to fact that even quality plywood can vary in thickness from sheet to sheet. So it's one sheet that you'll use to cut the profile strips you see in the drawing to the left. Then you glue up those strips and harvest the segments for making the columns of the panel. (Cut each segment a little wider than ¾".) There are detailed instructions online at *Woodsmith.com/262* to shed light on this step.

FIVE COLUMNS. The main drawing shows that the panel consists of five columns of these segments. Each of the sections come together to form the columns like you see in Figure 1 below. When the columns are complete, you can glue the five of them together to make the panel (Figure 2). After the glue dries, sand the front of the panel smooth with a drum sander.

GO 2 Online Extras

To learn how to make and glue up the intarsia segments, go to:

Woodsmith.com/262

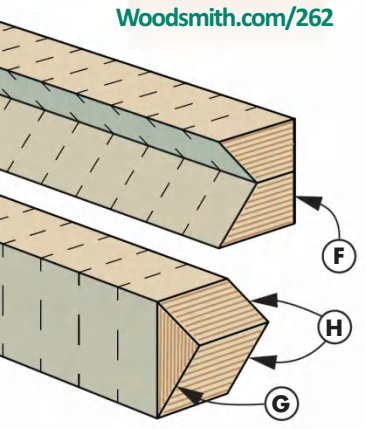

NOTE: *Start with long strips of glued up segments that are cut apart at the band saw*

ASSEMBLING AN INTARSIA PANEL

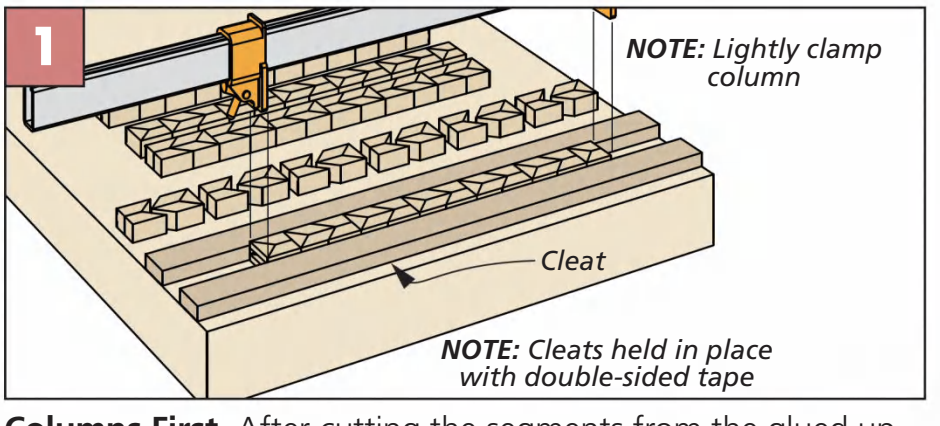

Columns First. After cutting the segments from the glued up strips, apply glue to the edges and place each piece between the cleats. Light pressure from a bar clamp is all that's needed.

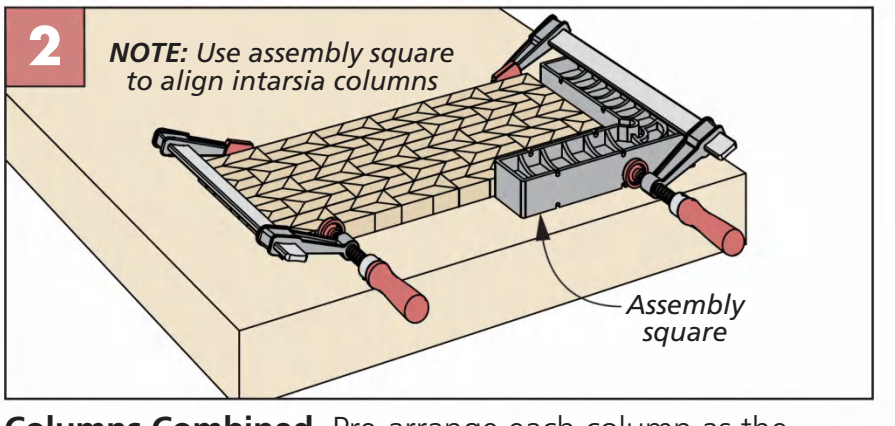

Columns Combined. Pre-arrange each column as the main drawing above shows. Use the assembly square to hold the columns square to each other.

SLOTS & SPLINES. This leaves you with cutting a slot in the edges of the panel to hold the splines that join the panel to the door frame (detail 'b' previous page). A slot cutting bit at the router table is on the menu here.

The splines are made from hardboard and mitered at the corners. As I mentioned earlier, there's a gap between the door frame and panel that makes a nice shadow accent that sets apart the two. The splines are the bridge that pull this look off. So before gluing them in place, I painted them with the red that was used for the cabinet back. While the splines dry, turn your attention to the stiles and rails.

DOOR FRAME

Making the door frame will be a soft landing to finish this project. As you see in the main drawing, there's a centered groove that runs through both parts to hold the panel you just finished. After sizing the parts, that's where I started — making the grooves (detail 'a').

Next in line was the mortises in the stiles (detail 'b') at the drill press. Then the tenons on the rails (detail 'c') at the table saw.

Now you can gather all the door parts and glue them up. Then you'll want to test fit the door in the opening before you work on the hinge mortises. There's a good chance you'll have to plane the edges of the door to create the correct reveal.

FINISHING TOUCHES. All that's left to do is drill the hole for the knob and install the magnetic catch. Then this little cabinet will be ready to add flavor to your favorite recipes.

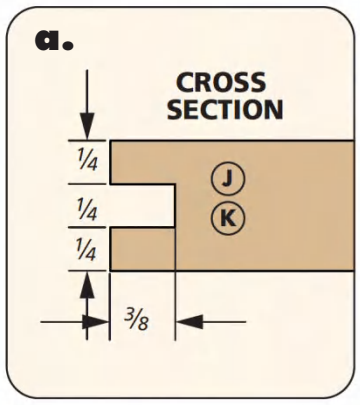

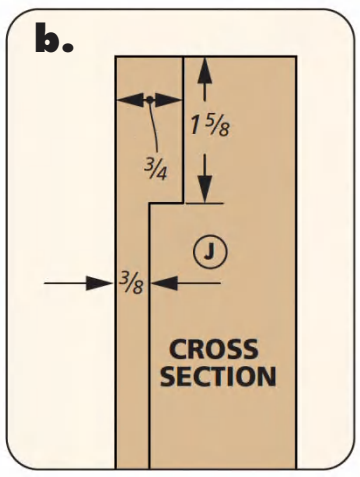

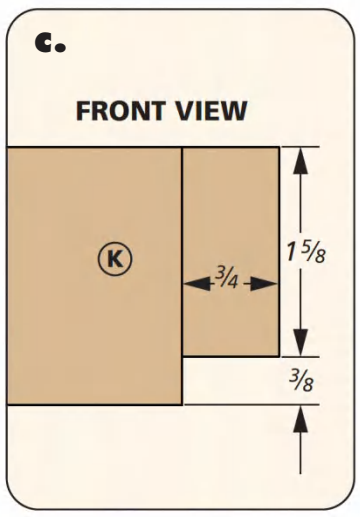

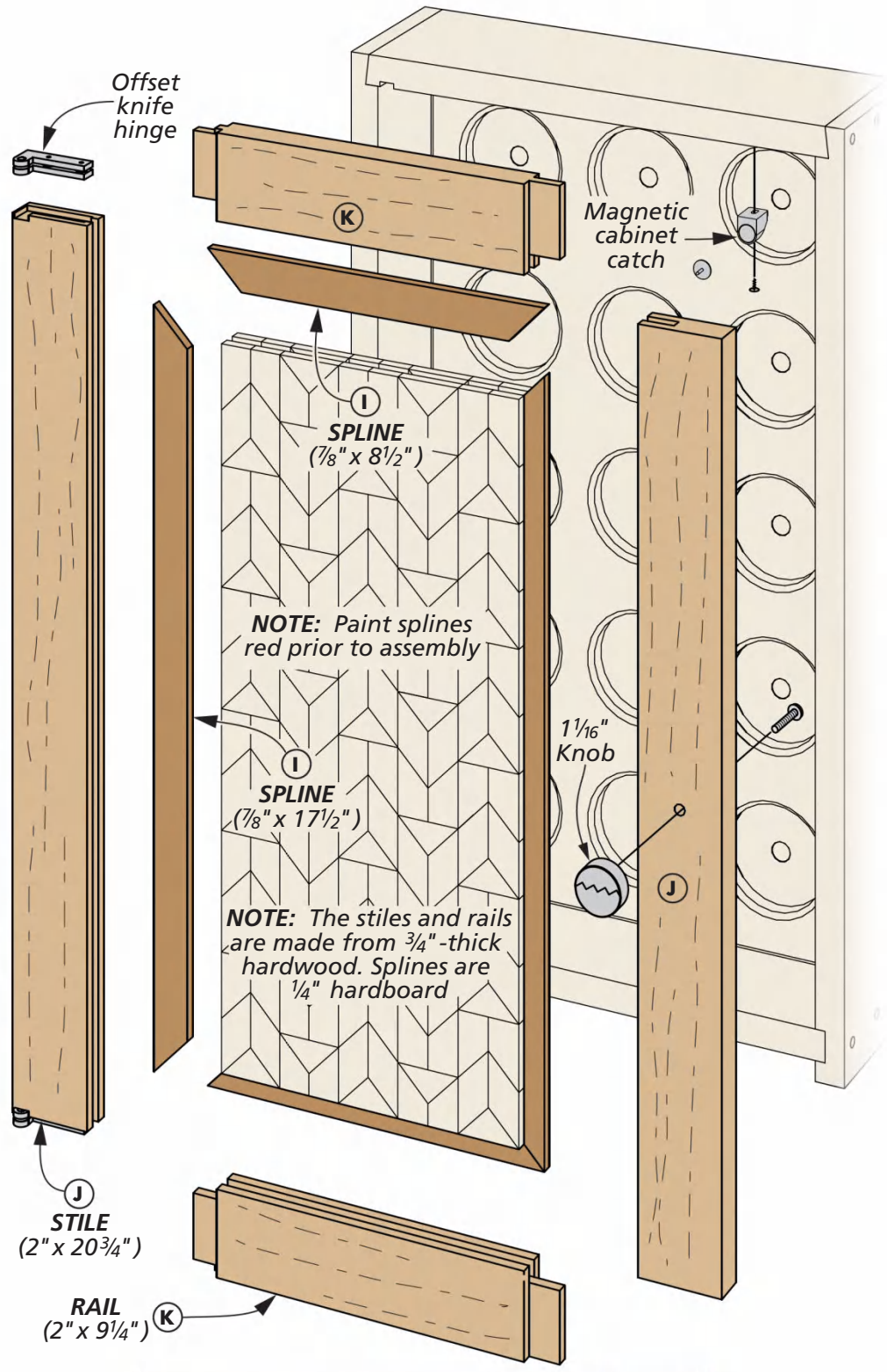

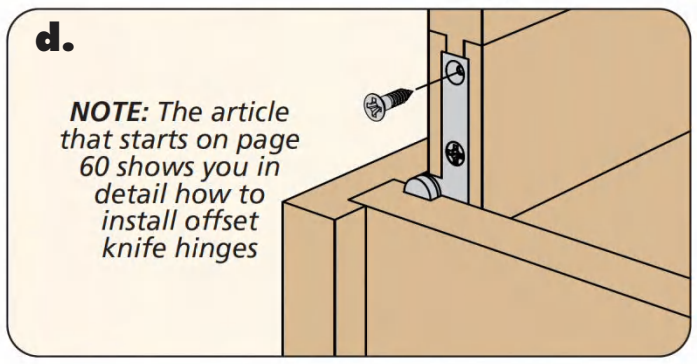

Materials, Supplies & Cutting Diagram

A	Sides (2)	3/4 x 4 - 22 3/4	**G**	Intarsia 2 (32)	3/4 ply. - 3/4 x 1 1/2	•	(2) 1 1/2" Offset Knife Hinges
B	Top (1)	3/4 x 4 - 12 7/16	**H**	Intarsia 3 (60)	3/4 ply. - 3/4 x 2	•	(15) 1/2"-dia. Adhesive Backed Magnets
C	Bottom (1)	3/4 x 4 - 12 1/4	**I**	Splines	1/4 hdbd. - 7/8 x 52rgh.	•	(15) 2 Ounce Metal Tins
D	Back (1)	3/4 ply. - 12 1/4 x 21 1/4	**J**	Stiles (2)	3/4 x 2 - 20 3/4	•	(1) 1 1/16"-dia. Knob
E	French Cleats (2)	1/2 ply. x 2 1/2 - 11 3/4	**K**	Rails (2)	3/4 x 2 - 9 1/4	•	(1) Magnetic Door Catch
F	Intarsia 1 (60)	3/4 ply. - 3/4 x 1 1/2					

3/4" x 9" - 60" Red Oak (3.8 Bd. Ft.)

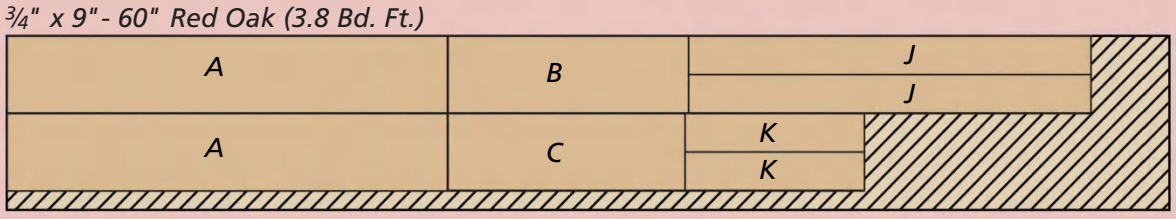

ALSO NEEDED: *One 24" x 24" Sheet of 1/2" Birch Plywood. One 48" x 48" Sheet of 3/4" Birch Plywood*

B&B House

Invite bees and butterflies to your garden with this attractive habitat.

▲ Flip-up doors with slots provide refuge for butterflies and give you access for cleaning.

Written by: Phil Huber, Project Design; John Doyle

Just outside my shop window lies my little vegetable patch. This project aims to provide a place for all my insect helpers while combining my woodworking with my gardening passion.

CENTRAL TOWER. The house is made in three sections: a tall central tower flanked by shorter additions. The drawing below shows the construction details. The sides and floors are joined with dadoes (detail 'c'). The rear edge of the sides is rabbeted for the back, as in detail 'd.'

The top ends of the sides are cut at 45° for the gable roof. Detail 'b' shows the two-piece roof is connected with a tongue and dado joint. You can assemble the sides, floors, and roof with waterproof glue. This assembly determines the final size for the back.

BEE TUNNELS. Several species of bees raise the next generation in tunnels. I used two shop-made solutions as well as purchasing tubes (refer to page 66) to fill the openings in the house. At right you can see one solution. This allows you to create deep holes without needing a long drill bit. The box above shows the steps to take at the router table.

TWO GROOVES EQUALS ONE HOLE

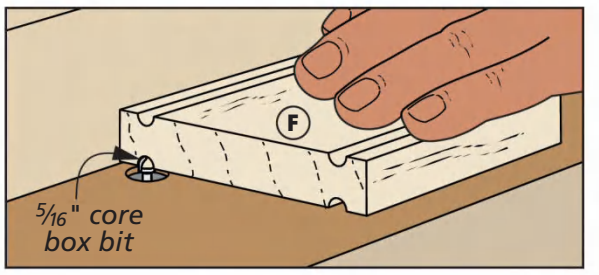

Symmetrical Setup. With just two fence setups, you can rout the two outer rows of grooves on the blocks.

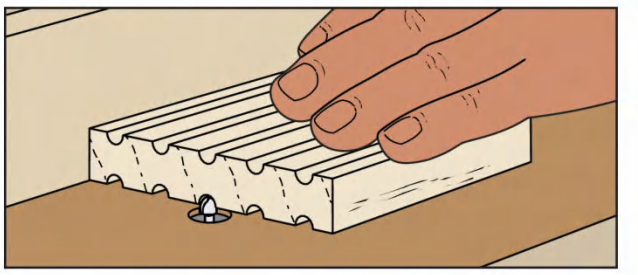

Center Groove. Finally, center the bit on the workpiece and rout the remaining grooves on all the parts.

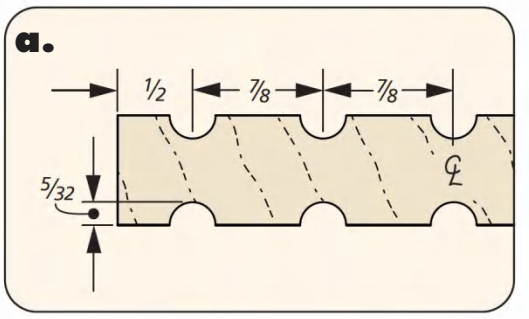

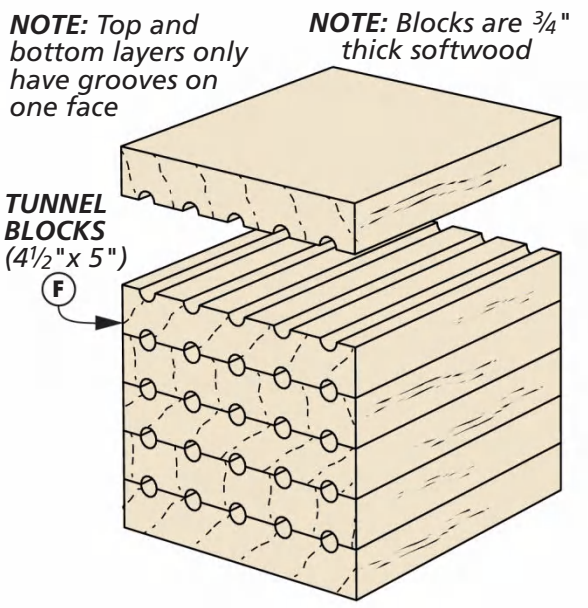

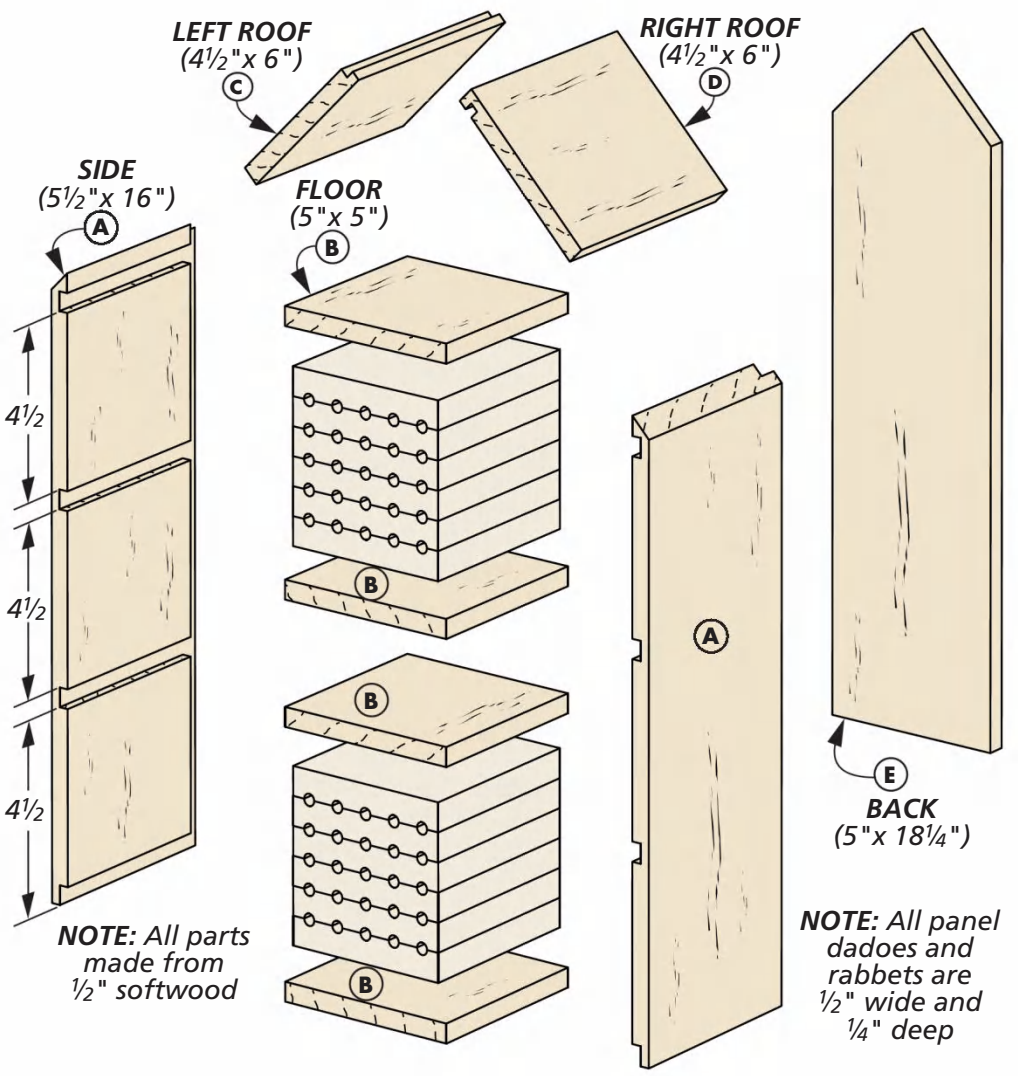

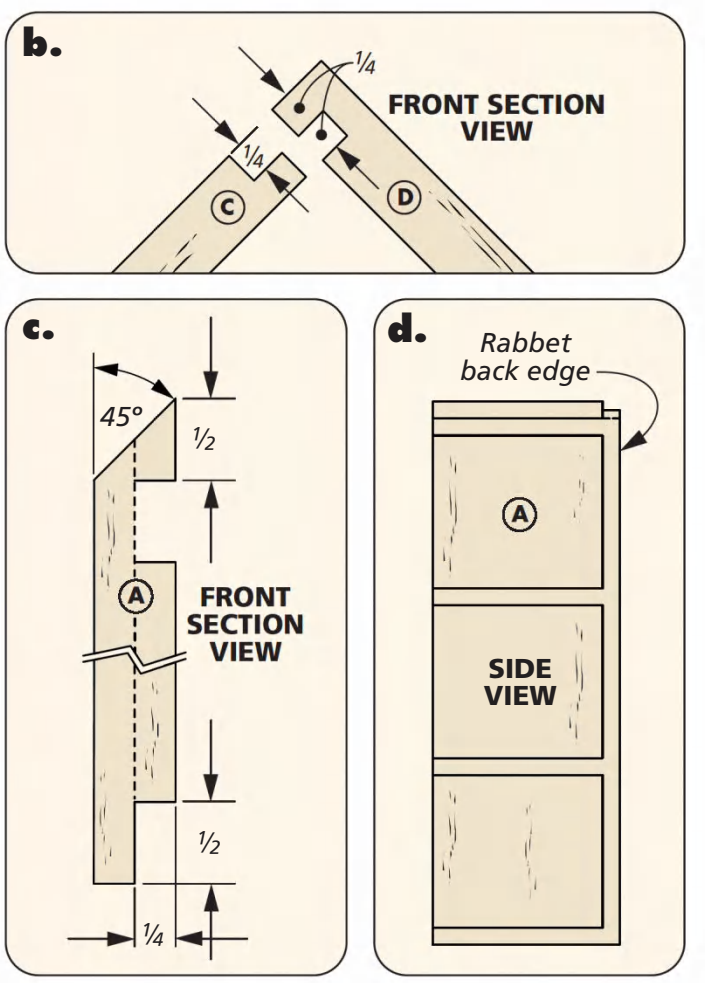

Illustrator: Bob Zimmerman

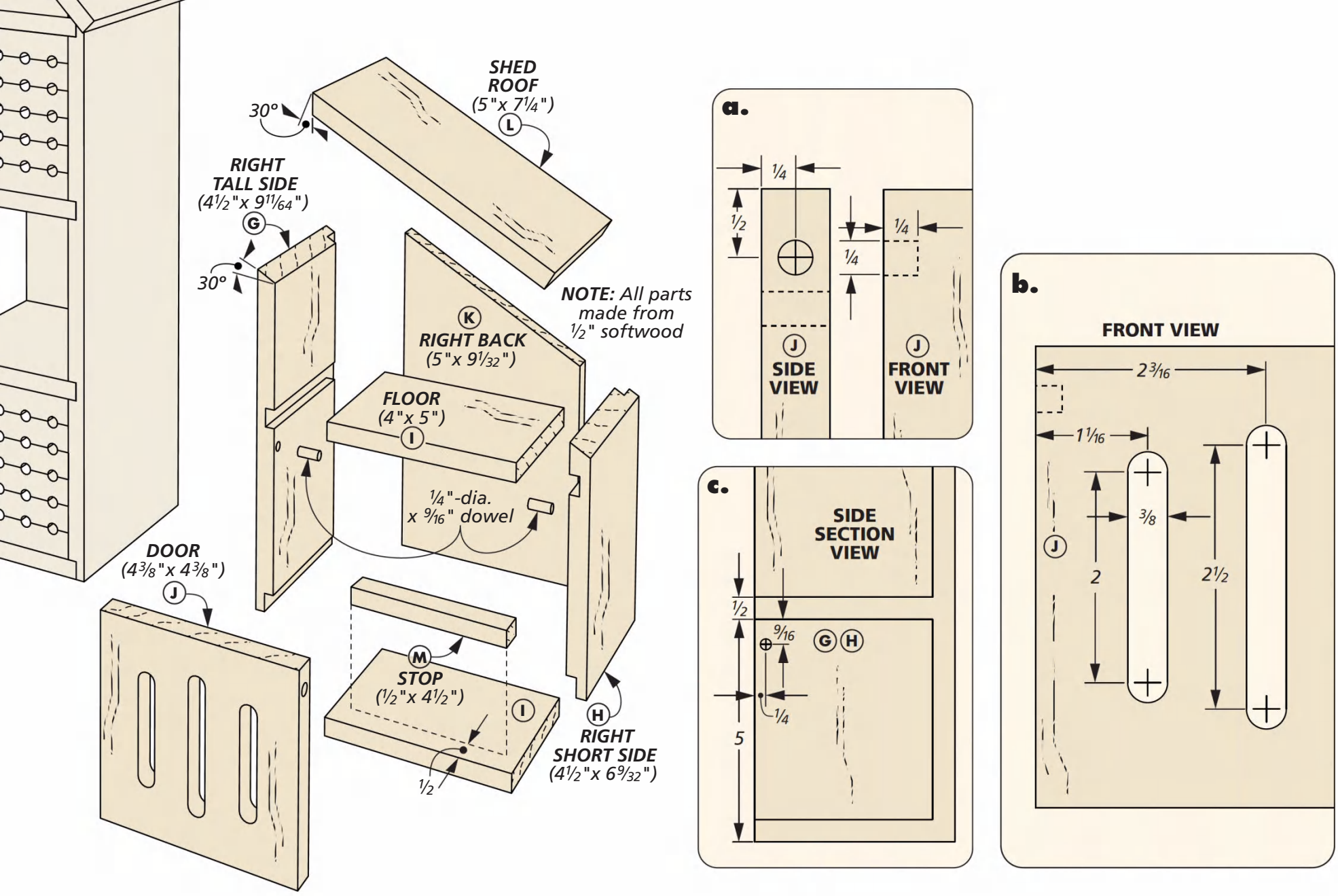

Additions for a GROWING FAMILY

Nothing is holding you back from placing the completed tower in your garden as is. But if you've come this far, might as well go all the way.

A shed roof addition on each side of the tower gives you more space for nesting tubes as well as the opportunity to invite butterflies to take up residence in your garden patch.

FAMILIAR CONSTRUCTION. Take a look at the drawing above and you'll notice that the general construction for the additions is the same as the tower: dadoes and rabbets. I do want to point out a few differences.

The first item to note is that the sides are different lengths. The top ends are cut at a 30° angle to accomodate the roof panel.

BUTTERFLY DOOR. How you arrange the interior of the house is up to you. To include a space for butterflies, I added a swinging door. The door has entry slots (detail 'b' and the box below). The door pivots on wood pins installed in the sides, as shown in details 'a' and 'c.' After gluing up the addition, glue on a stop just behind the door.

SIMPLE ROUTED SLOTS

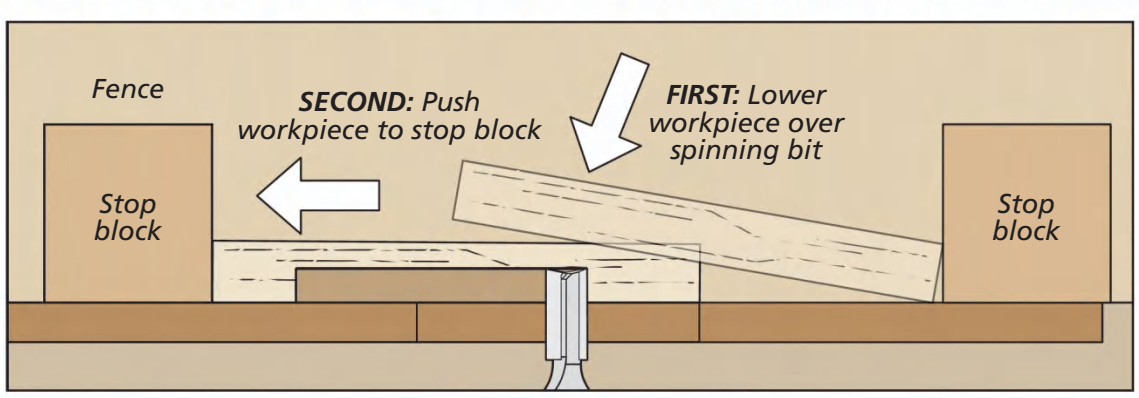

Stopped Slots. Use layout lines on the workpiece to locate stop blocks to the router table fence. Set the bit to cut slightly more than half the thickness of the workpiece. Brace the piece against the right stop block and lower it over the bit. Slide the piece until it contacts the other block. Flip the piece over to complete the cut.

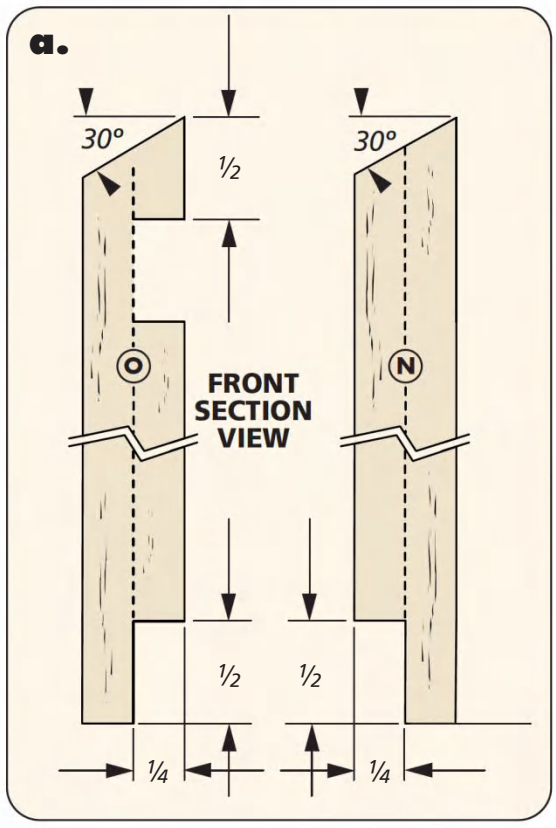

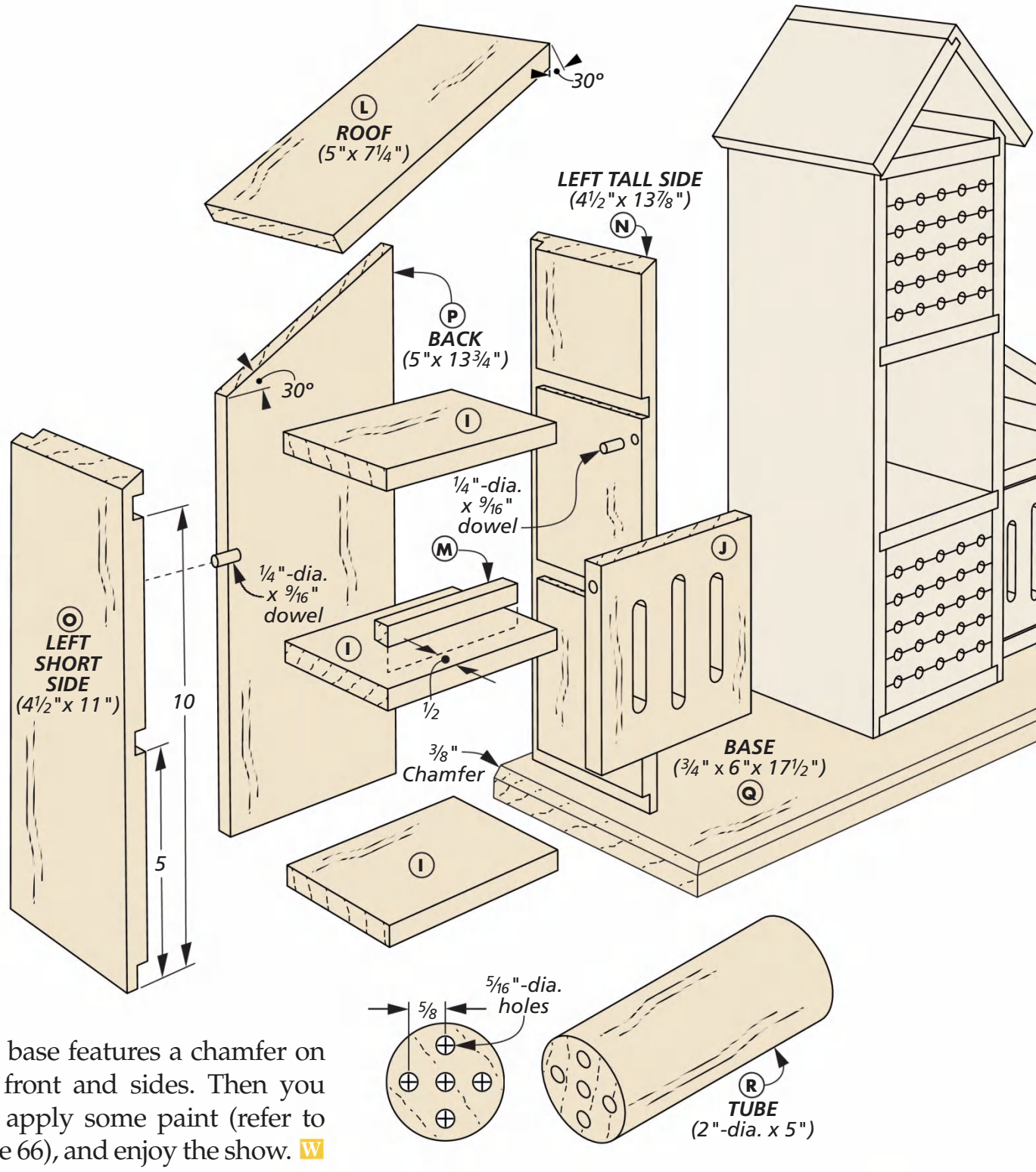

LEFT ADDITION

As you can see in the drawings on this page, the other addition is a bit taller than the right side. I included a second butterfly door in the center compartment.

NESTING TUBE. There's one other nesting option to show here. I made a nesting tube from a large diameter dowel with a series of holes.

BASE & PAINT. The last part is a base to anchor the sections. The base features a chamfer on the front and sides. Then you can apply some paint (refer to page 66), and enjoy the show. W

Materials, Supplies & Cutting Diagram

A	Sides (2)	½ x 5½ -15	**H**	Right Short Side (1)	½ x 4½ - 6 9/32	**O**	Left Short Side (1)	½ x 4½ - 11
B	Floors (4)	½ x 5 - 5	**I**	Floors (5)	½ x 4 - 5	**P**	Left Back (1)	½ x 5 - 13¾
C	Left Roof (1)	½ x 4½ - 6	**J**	Doors (2)	½ x 4⅜ - 4⅜	**Q**	Base (1)	¾ x 6 -17½
D	Right Roof (1)	½ x 4½ - 6	**K**	Right Back (1)	½ x 5 - 9 1/32	**R**	Tubes (7)	2"-dia. x 5" Dowel
E	Back (1)	½ x 5 - 18¼	**L**	Shed Roofs (2)	½ x 5 - 7¼			
F	Tunnel Blocks (12)	¾ x 4½ - 5	**M**	Stops (2)	½ x ½ - 4½	•	(4) ¼"-dia. x 9/16" Dowels (Hinge Pins)	
G	Right Tall Side (1)	½ x 4½ - 9 11/64	**N**	Left Tall Side (1)	½ x 4½ - 13⅞	•	(1 pkg.) Mason Bee Nesting Tubes	

½"x 5½" - 96" Cedar (3.2 Sq. Ft.)

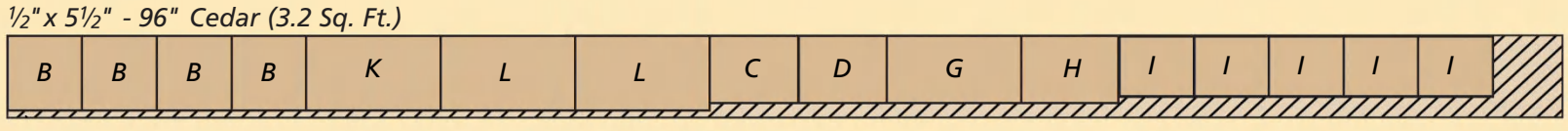

½"x 6" - 98" Cedar (4.0 Sq. Ft.)

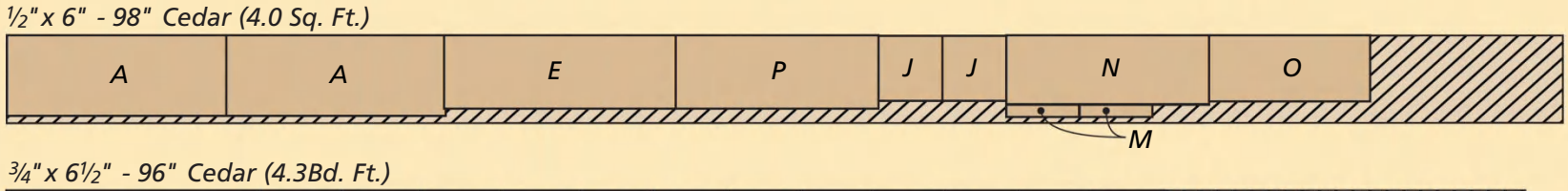

¾"x 6½" - 96" Cedar (4.3Bd. Ft.)

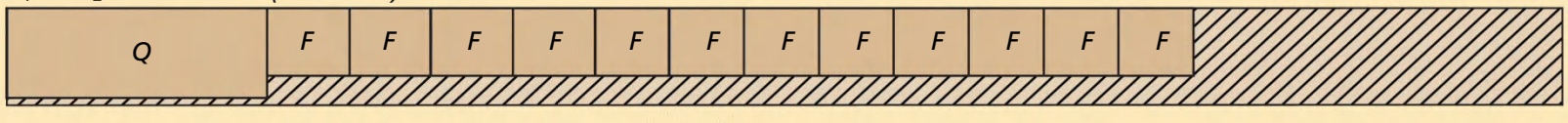

Installing Knife Hinges

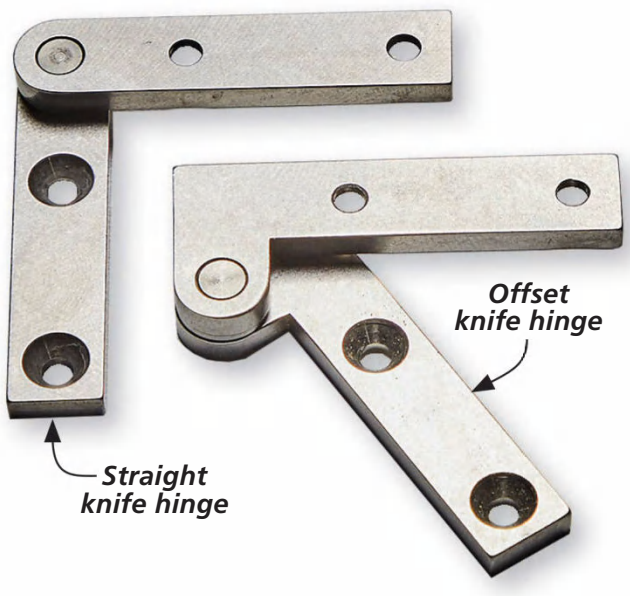

▲ You'll find two kinds of knife hinges: straight and offset. Offset hinges are for doors inset in a frame, while straight hinges are for doors that overlay the case.

Knife hinges are a subtle, sleek choice for cabinet doors. As you can see in the Intarsia Spice Cabinet on page 50, the hinge is nearly hidden when closed, and it remains largely out of sight when the door is open. This makes them an excellent choice when you want to emphasize the cabinet itself, with the hinge as a functional accent. However, precision is key with knife hinges, meaning they can be a bit tricky to install for the first time.

Knife hinges are composed of two halves (or "leaves"). As you can see above, one leaf is mortised into the door while the other is mortised into the cabinet. The door is suspended from the top and bottom, rather than off of the side.

Here I'll be installing a set of offset hinges, as was done for the Intarsia Spice Cabinet. First, I'll dry clamp the cabinet up, then I'll size the door. Next comes the mortising. Either the door or the case can be mortised first, but I'll be starting on the door here.

SIZING THE DOOR

The first thing to determine when sizing the door for the case is the gap. The gap between the door and the cabinet is based on the thickness of the washer separating the two hinge leaves. You'll need some shims for this,

Written by: Rob Petrie

Playing cards make good shims for measuring something as thin as these hinge washers. Three cards worked perfect for my hinge, whose washer measures just shy of 1/16".

Lay the cabinet on its back and set the door on a few scrap pieces to set it inside. Measure the gap with your shims and trim the door as needed until the shims just barely fit between.

and my go-to is a set of old playing cards, too dinged up to be used in any honest game.

Start with a slightly oversized door, then shave off the edges so your shims just fit between the door and cabinet. An offset hinge will need the gap balanced on all four sides. A hand plane is my preferred tool here to avoid taking off too much at once.

DOOR MORTISES

Now for some mortises, starting with the door. Set aside the pencil for now and go for a marking knife instead. The grooves from the knife will help your chisel register exactly on the mark.

LAYOUT. Clamp the door in a vise at a comfortable height and set the hinge on top. For an offset hinge, position the end of the hinge flush with the side of the door, and the pin hole centered halfway over the edge of the door, as in Photo 1 below.

Scribe shallow cuts around the leaf with the marking knife. To make sure your knife isn't pushing the hinge around, use a square to make more defined lines with the knife. Remove the leaf and register the tip of the knife in one of the grooves, then butt a square up against it to make the mark. Once finished, use the square to help you trace these lines with a pencil, as you'll want them very visible when you rout.

ROUTING & PARING. Speaking of the devil, it's time to remove the waste. A palm router with a straight bit works best. First, set your router to the same depth as the thickness of the leaf. You'll need to support the router base to keep it from wobbling so add a pair of scrap boards on either side of the door. Now rout the bulk of the waste out freehand.

After you've finished making dust, use a chisel to square up the mortise as in Figure 3. Register the tip of the chisel in the knife marks to finish the sides.

A marking knife makes for more accurate layouts than a pencil. After making light marks, use a square to help cut deeper.

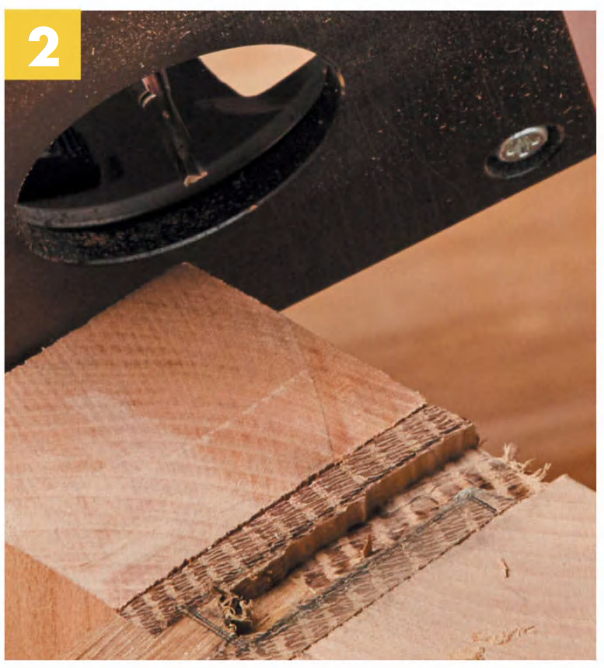

Rout out the waste in the center of the mortise. Stay at least 1/16" in from your layout lines to give you room to chisel.

Register the tip of the chisel in the marking knife gouge to clean up the mortise. Pare in small bites to prevent chipping.

Illustrations: Bob Zimmerman

Use your shims to help you lay out the gap between the hinge and cabinet side. Use the marking knife to make a light score, marking the end of the hinge.

Next, disassemble the cabinet. On the top and bottom pieces, set the hinge in place, matching the placement of the door hinge and along the knife mark at the side. Lightly score around the hinge to establish the mortise profile.

CABINET MORTISES

The door is done, and with the cabinet still dry clamped, it's time to mark out the matching mortises on the top and bottom of the cabinet. First, you'll want to mark out the distance from the side to the hinge. Here I used my shims (Photo 1 above), as I knew it would be enough to allow my door to swing open easily.

Now disassemble the cabinet. You'll next need to figure out the distance the leaves will be from the front of the cabinet. This is easy, since it's the same distance as the hinge you just mortised from the front of the door. Of course, if the top or bottom of the cabinet you're working on extends out further than the door, you'll need to account for that as well here.

LAYOUT. Place a hinge on the case top (or bottom), measuring from the front and lining the end up to the mark you scribed earlier. Once in place, lightly scribe around the hinge, as in Photo 2. As before, come back with a square to cut the layout lines deeper, then again to mark them with a pencil for routing.

ROUTING. With the mortises laid out, it's time to rout. Clamp your piece to your workbench and follow the same process as before. Freehand rout to remove the majority of waste, leaving a small amount before the layout lines.

Define the light cuts with deeper ones alongside your square. Once finished, go back over it with a pencil. Since these mortises will be freehand routed too, having something to look at will be a big help.

PARING. Follow your router work up with chiseling. Clean and square the mortises. Two things can make a big impact in the quality of your paring on these mortises: having a sharp chisel and having the right size.

Needless to say, a sharp chisel will make your job much easier, especially when paring into end grain. It will also help to prevent chipout. Taking some time to sharpen your chisel before getting to work pays off.

As for the right size chisel, I was lucky enough to have a sharp chisel on hand that was the same width as the hinges. This allowed me to run it straight down the length of the hinge after paring the sides, making sure there were no ridges or burrs that could cause the hinge to sit funny in the mortise.

Once you've finished the first piece, repeat the routing and chiseling process once more on the opposite side of the case. Then your mortises are done.

ASSEMBLY

Everything's cut on these hinge mortises, but there's still the matter of assembling the cabinet. To begin with, put the hinges in their mortises and drill the pilot holes. A self-centering bit is a good idea here to keep the hinge from sliding out of place while you drill. Be sure to watch your bit depth when drilling out the pilot holes for the top and bottom pieces. After you're done, screw the hinges onto the case pieces, but leave them out of the doors for now.

Now it's time to glue up the case, but I recommend making one more dry fit, just to be sure everything's situated correctly.

ATTACHING THE DOOR. Once the cabinet is clamped up again, snap the door leaves onto their cabinet counterparts, then lay the cabinet on its back. To attach the door, line up the door mortises with the door leaves and slowly slide it into place. Depending on how tight you made your mortises, you may need a helper for this task. Once in place, screw the hinges to the door.

FINAL ASSEMBLY. Once everything fits in place properly and the door swings easily, it's time to glue up the cabinet. After the glue dries, simply slide the door back onto its hinges as you did before and screw it in.

Knife hinges are a good choice when you want the cabinet or door itself to shine. Whether it's intarsia, a brilliant veneer, or some impressive joinery, a knife hinge makes for a subtle complement to a variety of different projects.

Although the learning curve is slightly steeper and the margin for error is less forgiving than other hinge types, fitting a knife hinge into a perfect, gapless mortise is particularly rewarding. Once you learn how to install them, they can be a fun piece of hardware to add to a project. With a little practice, these uncommon hinges could become a new favorite. W

BE NICE TO YOUR BRASS SCREWS

Easy Does It. Some knife hinges will come with a set of brass screws and one steel screw. As brass is a rather soft metal, it's prone to stripping out or breaking off. If you're using brass screws, you'll want to first drive in a steel screw of the same size to "chase" the pilot holes. Use a screwdriver to sink in brass screws, as the force of a drill or driver could break them off. Alternatively, some people choose to use steel screws instead, painting them to match the hinge afterward.

Stronger steel screws can be used to "chase" the pilot hole in preparation for weaker brass screws, which may break or strip out on their own.

With the cabinet clamped up, the case leaves in their mortises, and door leaves loosely attached, fit the door leaves into their respective mortises and slide the door into place.

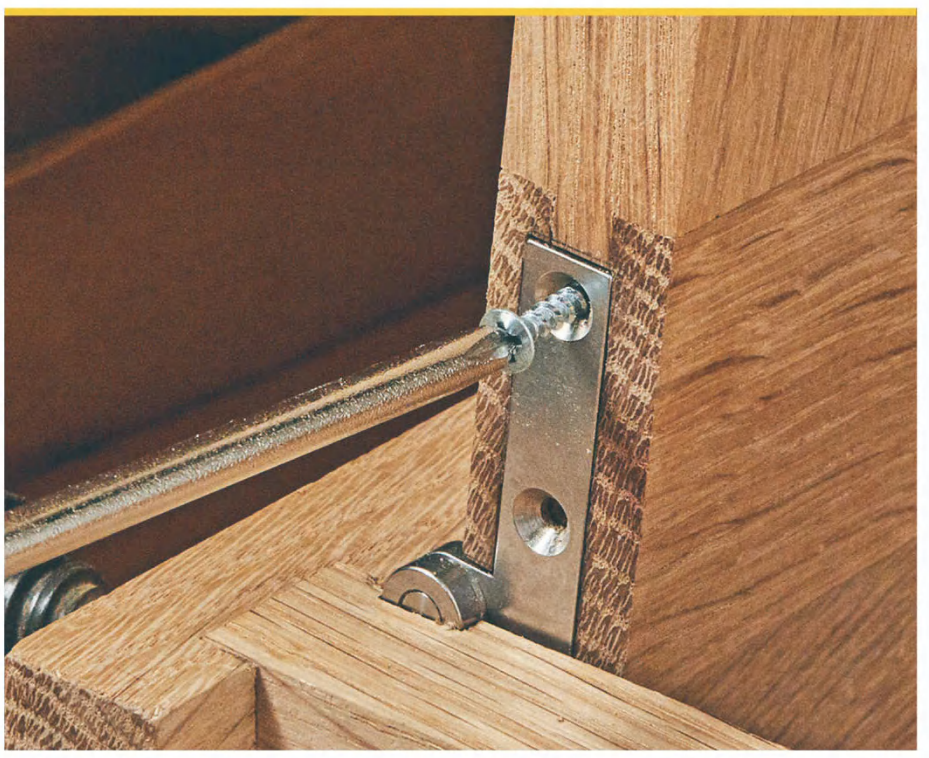

With the door in place, snug the screws down to fully seat the hinge in the mortise. Avoid using power drivers, as even on steel screws you could risk over-tightening the hinge.

A New Angle on Chamfer Bits

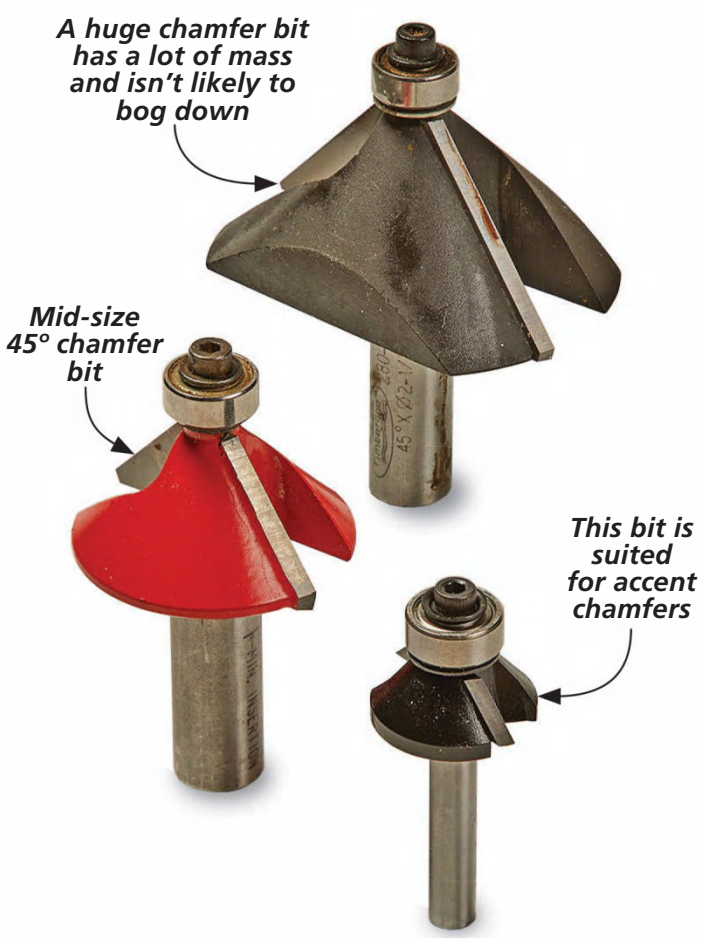

▲ The standard 45° chamfer bit comes in a range of sizes. For simply easing an edge, I suggest getting a small bit first. Add a mid-size bit only as you need it.

The router bit I use the most: a chamfer bit is the one I think about the least. On one hand that's good because it means the bit does its job well. However, a little contemplation about your options can lead to better results in our projects.

45° IS A GIVEN. The chamfer bit you likely have cuts 45° profiles. The result is a balanced, light-catching facet. That's the reason I reach for a chamfer bit. That crisp glint transitions from one surface of a project to another. The drawings on the top of the next page show the range of functions that a chamfer fills.

THINK ABOUT SIZE. There's more going on behind that facet. As you can see in the photo at left, chamfer bits come in several sizes from tiny to supersized. The temptation is to believe that larger bits are more versatile and therefore the better value.

That's the reasoning I had in selecting a mid-size bit. However, I found that most of the time I was easing edges with small chamfers. Most of the cutting edge was unused.

The cute little bit upfront caught my attention like a puppy at the pet store. It followed me home and practically lives in the collet of my palm router.

As for the other bit, it stands in reserve waiting for larger chamfering duties. But I also found it another role: joinery.

I like making small boxes with mitered corner joints. In workpieces that are ⅜" thick or less, a chamfer bit cuts a clean, accurate miter. And it's easier to set up than a table saw.

So what about that huge bit? I found it in the shop at *Woodsmith*. I'm not sure what project required

Written by: Phil Huber;

that big of a bit. It's there for scale. So unless you're building large, it's not a bit you need.

A NEW ANGLE

On a recent dining table project, I wanted to ease the edge, but I wanted something different than a standard 45° chamfer. With a little digging, I found chamfer bits in several other angles. (For sources of the bits shown here, refer to page 66.)

LAMINATE TRIMMER. The small bit shown below is designed for trimming plastic laminate flush with a surface and easing edges. You could just as easily use it to create a small 25° chamfer on project parts.

PICK AN ANGLE. The remaining three bits come from *Infinity Cutting Tools*, but you can find similar bits from other makers. The angles shown are 15°, 22.5°, and 30°. The samples show how a subtle change in angle affects the look of the profile.

No, you don't need all of them. I suggest picking one to use as a contrast to a regular chamfer.

FLIP IT. One last thing. With non-standard chamfer bits, you really get two profiles in one. If you change the orientation of the workpiece in relation to the bit, you end up with its complementary angle. (Dig back to high school geometry for more.)

A chamfered edge plays nicely with a wide variety of design styles. And for such a simple detail, there's a lot of room to explore how to use a chamfer in the projects you build. W

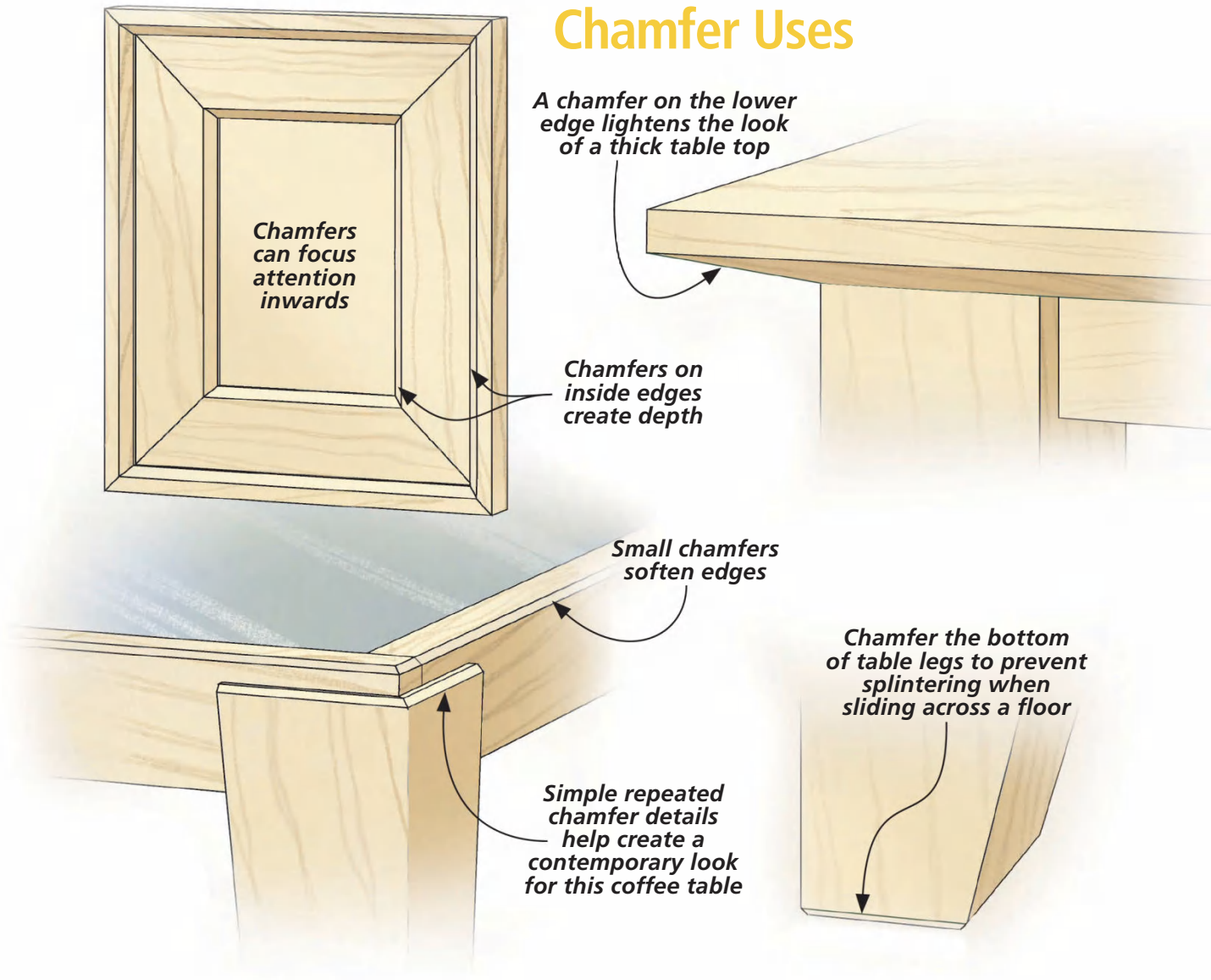

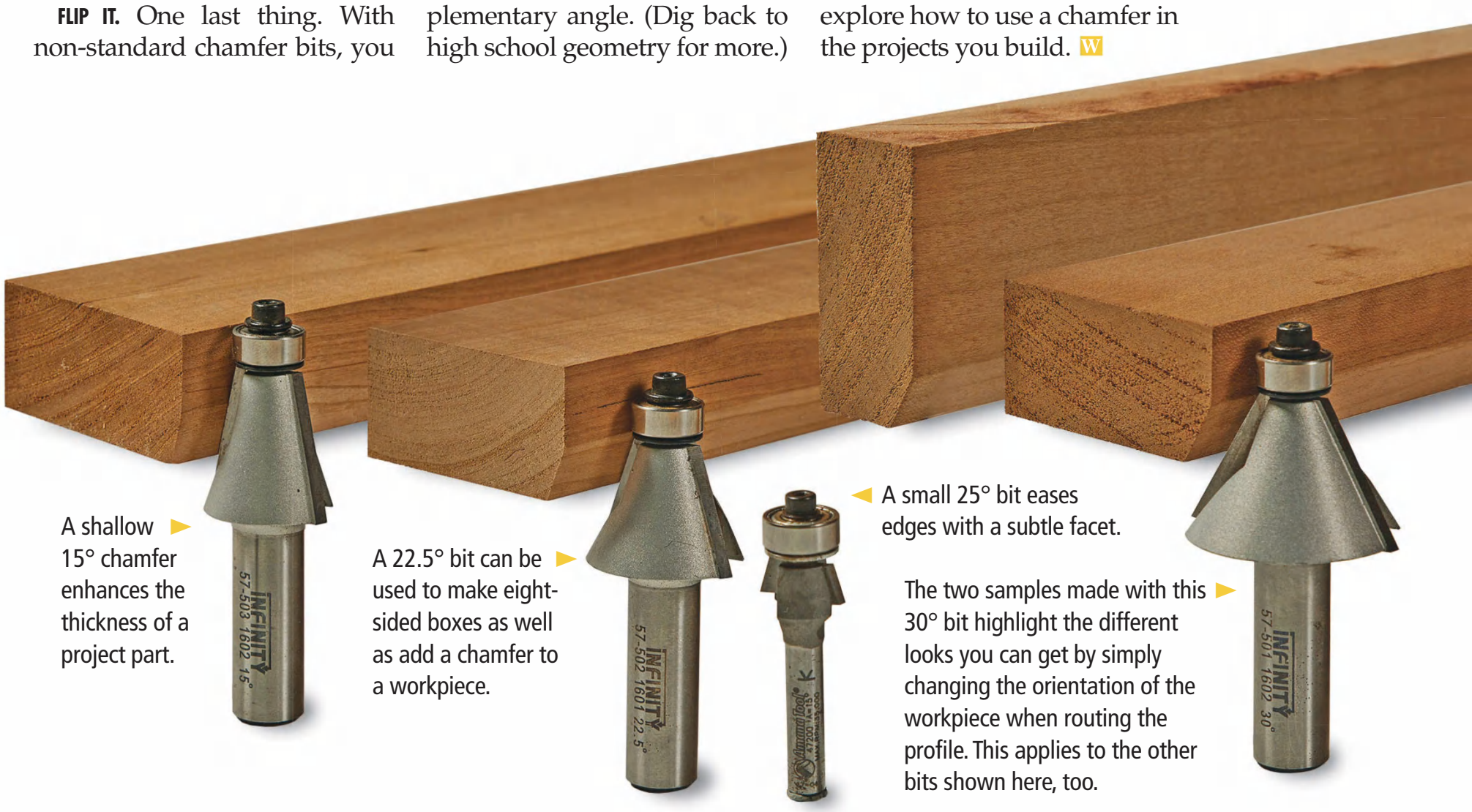

A shallow 15° chamfer enhances the thickness of a project part.

A 22.5° bit can be used to make eight-sided boxes as well as add a chamfer to a workpiece.

A small 25° bit eases edges with a subtle facet.

The two samples made with this 30° bit highlight the different looks you can get by simply changing the orientation of the workpiece when routing the profile. This applies to the other bits shown here, too.

Illustrations: Bob Zimmerman

Sources

Most of the materials and supplies you'll need to build the projects are available at hardware stores or home centers. For specific products or hard-to-find items, take a look at the sources listed here. You'll find each part number listed by the company name. See the left margin for contact information.

MAIL ORDER SOURCES

Project supplies may be ordered from the following companies:

Woodsmith Store
800-444-7527
store.woodsmith.com

Rockler
800-279-4441
rockler.com

Amana Tool
800-445-0077
amanatool.com

amazon.com

Benjamin Moore
855-724-6802
benjaminmoore.com

General Finishes
800-783-6050
generalfinishes.com

Infinity Cutting Tools
877-872-2487
infinitytools.com

Lee Valley
800-871-8158
leevalley.com

Michaels
michaels.com

Minwax
800-523-9299
minwax.com

McMaster-Carr
630-833-0300
mcmaster.com

Osborne Wood Products
800-849-8876
osbornewood.com

Varathane
Varathanemasters.com

PICTURE FRAME *(p.28)*

- **Michaels**
  - *1" Turnbuttons* 10155481
  - *D-Ring Kit* 10114573
  - *Rubber Bumpers* 10032793

Seal-A-Cel oil from *General Finishes* is what I started with on the frame. Two coats of lacquer topped off the frame and gave the surface a pleasant luster.

COPING SAW *(p.34)*

- **McMaster-Carr**
  - *Aluminum Sheet* 8885K17
  - *Connecting Rods* 6516K176
  - *Aluminum Bar* 8975K42
  - *Aluminum Rod* 8974K26
  - *Delrin Washers* 95647A215

The coping saw frame has a two coats of rattle can lacquer. A coat of oil adds color to the handle without making it slippery.

PRIMITIVE HUTCH *(p.40)*

- **Lee Valley**
  - *3" Primitive Handle* . . 01W5112
  - *1½" Primitive Handle* 01W5111
  - *1¾" Ball-tip Hinge* . . . 02H1007
- **Osborne Wood Product**
  - *Egg Round Bun Foot* . *4120POP*

The majority of the hutch was painted with *Benjamin Moore's* "Country Redwood" in a matte finish. The beadboard backs are *Benjamin Moore's Regal* "Conventry Gray" also in matte finish.

SPICE CABINET *(p.50)*

- **Lee Valley**
  - *1½" Offset Hinge* 05H0155
  - *1/2" Magnets* 99K3465
  - *1¹⁄₁₆" Knob* 02A4435
- **Amazon**
  - *Cabinet Catch* B09446DZPF
  - *2oz. Metal Tins* . . . B07L6CJ7MN

To finish the cabinet, I started with a coat of *General Finishes* "Candlelight" stain. Then I applied a couple of coats of lacquer.

BEE HOUSE *(p.56)*

- **Amazon**
  - *Nesting Tubes* B08X4KX963

The roof and base of the bee house were painted with *Benjamin Moore's Regal* "Witching Hour." The doors are "Million Dollar Red."

CHAMFER BITS *(p.64)*

- **Amana Tools**
  - *Bevel Laminate Trim* 47202
- **Infinity Cutting Tools**
  - *15° Chamfer Bit* 57-503
  - *22.5° Chamfer Bit* 57-502
  - *30° Chamfer Bit* 57-501

Woodsmith® eTIPS

- **Valuable Video Tips** from the Woodsmith Shop TV Show
- **Quick & Easy Printable Tips** from Woodsmith Magazine
- **Latest Video Plans** from Woodsmith Plans

Sign Up Today For FREE Weekly eTips!

► WoodsmithTips.com ◄

Do it Right with DR®

Trim and Mow the EASY Way!

- TRIM fencelines and perimeters
- MOW waist-high grass & weeds
- 5X the power of handheld trimmers
- Self-propelled models
- Gas- or battery-powered

★ USA
ENGINEERED AND BUILT
Assembled in the USA using domestic and foreign parts.

DRtrimmer.com

America's Original Field & Brush Mower

- MOW FIELD GRASS up to 8' high
- CUT BRUSH up to 3" thick
- Engines up to 22 HP
- Decks up to 34" wide
- Power steering

★ USA
ENGINEERED AND BUILT
Assembled in the USA using domestic and foreign parts.

PLUS ALL-NEW
Commercial-Grade XD Series with hydrostatic drive!

DRfieldbrush.com

Make Yard Cleanup EASY with a Chipper Shredder!

- CHIP big branches up to 5" thick
- SHRED lighter yard & garden waste
- REDUCE it all to a fraction of its original volume

★ USA
ENGINEERED AND BUILT
Assembled in the USA using domestic and foreign parts.

DRchipper.com

Make Stumps Disappear!

★ USA
ENGINEERED AND BUILT
Assembled in the USA using domestic and foreign parts.

- Grind away stumps fast
- Tungsten carbide-tipped teeth
- Rotary head takes 360 "bites" per second
- Self-propelled available

DRstumpgrinder.com

SALE!
FREE SHIPPING
SOME LIMITATIONS APPLY

Request your FREE PRODUCT CATALOG Online or Toll-Free at 888-212-0792

GoDRpower.com

DR POWER EQUIPMENT

WEST SYSTEM®

FIND OUT MORE AT WESTSYSTEM.COM

Woodsmith

Back Issue Library **Online**

An Incredible **VALUE!**

- ✓ Access every issue of Woodsmith ever published — over 228
- ✓ Get over 4,000+ projects, tips and technigues.
- ✓ Enjoy instant online access on your computer, laptop — even tablet.

LEARN MORE at www.woodsmithlibrary.com

Sign Up for Free Weekly eTips

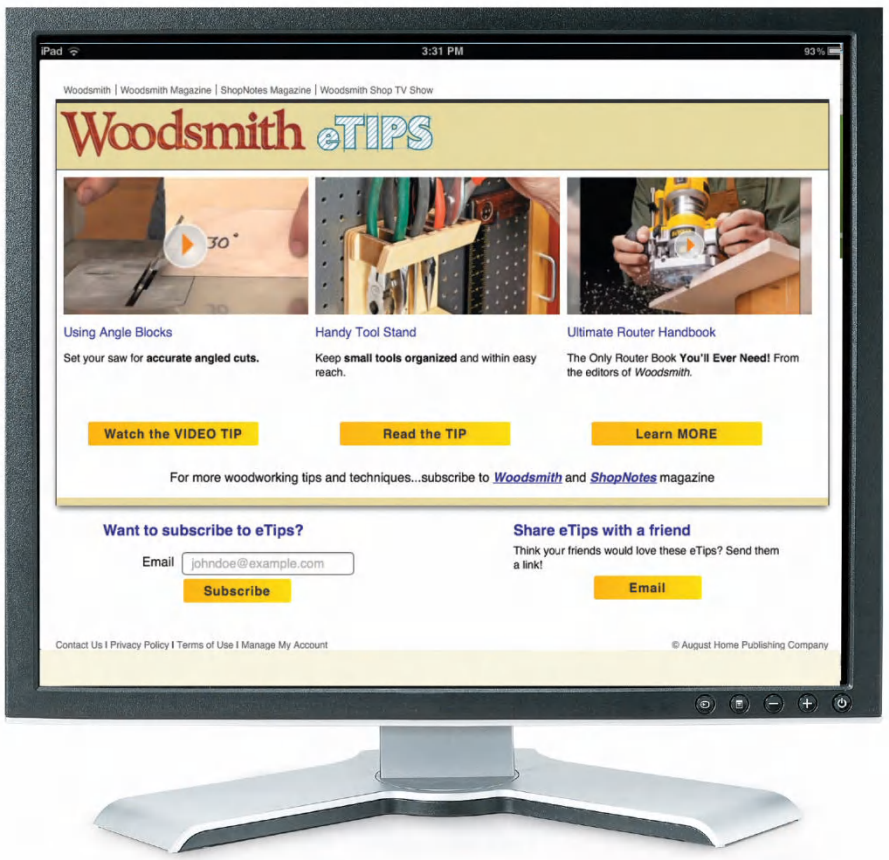

Desktop

- Get a video tip sent to you every week
- Includes a printable, step-by-step tip
- Ready when you are — on any device

Laptop

Tablet

Smartphone

Sign up today at Woodsmith.com